THERMO KING

Installation Manual

Precedent™ C-600, S-600, and S–700 Installation Manual

Single Temperature Systems

Includes Rail Ready (RR), Domestic Refrigerated Containers (DRC) and Rail Box Car (RBC) applications.

Rev. K

December 2024

TK 55496-2-IM-EN

TRANE TECHNOLOGIES

THERMO KING

Introduction

This manual was written to assist with the installation of the Thermo King Precedent refrigeration systems onto trailers, Domestic Refrigerated Containers (DRC) and Rail Box Cars (RBC) specifically designed and built for refrigerated applications.

Due to its complexity, you should not attempt this installation unless you:

- Are an experienced mechanic
- Can safely lift 34 kilos (75 lbs.)
- Are certified or trained in the repair and maintenance of diesel powered refrigeration systems
- Have a basic understanding of electricity and electrical wiring
- Have the necessary tools and equipment to complete the installation

This manual is published for informational purposes only. Thermo King makes no representations warranties express or implied, with respect to the information recommendations and descriptions contained herein. Information provided should not be regarded as all-inclusive or covering all contingencies. If further information is required, Thermo King Corporation Service Department should be consulted.

Thermo King's warranty shall not apply to any equipment which has been "so installed, maintained, repaired or altered as, in the manufacturer's judgment, to affect its integrity."

Manufacturer shall have no liability to any person or entity for any personal injury, property damage or any other direct, indirect, special, or consequential damages whatsoever, arising out of the use of this manual or any information, recommendations or descriptions contained herein. The procedures described herein should only be undertaken by suitably qualified personnel. Failure to implement these procedures correctly may cause damage to the Thermo King unit or other property or personal injury.

Revision History

Revision A	(05/15) Released new manual format.
Revision B	(07/15) Pages 42-43: corrected battery cable installation procedures to comply with industry standards; Page 51: added important information regarding disabling Eco Pulldown Mode during engine break-in procedures.
Revision C	(12/15) Added Rail Ready (RR) information.
Revision D	(05/18) General update of manual including new door latches and factory installed fuel pump and harness.
Revision E	(01/19) Added new fuel line installation procedures.
Revision F	(08/20) Added information regarding wiring SmartPower units with the remote power receptacle option.
Revision G	(05/21) Added information regarding new fuel system installed on S-600 and S-700 units only.
Revision H	(01/22) Corrected text error.
Revision I	(02/23) Corrected battery P/N.
Revision J	(06/23) Added new fuel filter system for C-Series units.
Revision K	(12/2024) Updated UFLS Sensor Info and Other General Updates

©2015 Trane Technologies

THERMO KING

Table of Contents

Safety Precautions 5
- Danger, Warning, Caution, and Notice 5
- General Practices 5
- Battery Installation and Cable Routing 7
- Refrigerant Hazards 7
- Refrigerant Oil Hazards 8
- First Aid 9
- Fuel Tank Mounting 10
- Fuel Line Installation 10

Trailer Requirements 11
- Swing Radius and King Pin Requirements 11
- Evaporator Opening Requirements 12
- Mounting Hardware Requirements 13
  - Unit Mounting Bolts 13
  - Mounting Bolt Specifications 14

Unit Dimensions 16
- Evaporator Blower Outlet Housing Updated in 2023 20

Unit Weight 21

Battery Selection Guide 22

Lifting Bar Dimensions 23

Required Tools for Installation 25

Installation Components – Trailer Applications 26

Installation Components – RBC Applications 27

Installation Components – DRC Applications 28

Unpacking Unit 29

Installing Heat Shield 30

Installing Unit 31
- Unit Installation 31
- Access to Mounting Bolts 31

Installing Drain Hoses and Coolant Overflow Hose – Trailer Applications 33

Installing Drain Hoses and Coolant Overflow Hose – DRC and RBC Applications 34
- Installation Procedures 34

Installing Fuel Lines 35

C-Series Units Only 35
Without Optional Fuel Heater. 35
With Optional Fuel Heater. 37
S-Series Units Only 39
Without Optional Fuel Heater. 39
With Optional Fuel Heater. 41
Installing UFLS Harness – Trailer Applications 43
Units Built Before December 16, 2024 43
Units Built After December 16, 2024 45
Installing Float Style Fuel Level Sensor Harness – DRC and RBC Applications. 47
Wire Routing and Connections. 47
Installing SmartPower Receptacle — Trailer Applications 49
Installing LED Clearance Lighting (Option) – Trailer Applications 50
Installing Battery 51
Installing Top Covers and Bottom Pan – Trailer Applications. 53
Installing Top Covers and Bottom Pan – DRC and RBC Applications 55
Installing Bottom Pan Gromments – DRC and RBC Applications Only. 57
Installing Exhaust Pipe Extension – DRC Applications Only 58
Operating the Unit 59
High Voltage Safety Precautions 59
High Voltage Components. 59
Unit Fan Operation Safety Precautions. 59
Condenser and Evaporator Fans 59
Priming the Fuel Pump. 63
Programming the Controller. 64
Fuel Level (Guarded Access). 64
Unit Check List 65

THERMO KING

Safety Precautions

Danger, Warning, Caution, and Notice

Thermo King recommends that all service be performed by a Thermo King dealer and to be aware of several general safety practices.

Safety advisories appear throughout this manual as required. Your personal safety and the proper installation of this unit depend upon the strict observance of these precautions.

⚠ DANGER Indicates an imminently hazardous situation which, if not avoided, will result in death or serious injury.

⚠ WARNING Indicates a potentially hazardous situation which, if not avoided, could result in death or serious injury.

⚠ CAUTION Indicates a potentially hazardous situation which, if not avoided, could result in minor or moderate injury and unsafe practices.

NOTICE Indicates a situation that could result in equipment or property-damage only accidents.

General Practices

⚠ Danger

Hazardous Voltage!

Dangerous three phase AC electric power is present whenever the unit is operating in either Diesel Mode or Electric Mode and whenever the unit is connected to a source of external standby power. Voltages of this magnitude can be lethal. Exercise extreme caution when working on the unit. If there is a risk of energized electrical contact, arc, or flash, technicians MUST put on all PPE in accordance with OSHA, NFPA 70E, or other local, state, or country-specific requirements for arc flash protection PRIOR to servicing the unit. NEVER PERFORM ANY SWITCHING, DISCONNECTING, OR VOLTAGE TESTING WITHOUT PROPER ELECTRICAL PPE AND ARC FLASHING CLOTHING. ELECTRICAL METERS AND EQUIPMENT MUST BE PROPERLY RATED FOR INTENDED VOLTAGE.

⚠ Danger

Hazard of Explosion!

Never apply heat to a sealed refrigeration system or container. Heat increases internal pressure, which might cause an explosion resulting in death or serious injury.

⚠ Danger

Hazardous Gases - Personal Protective Equipment (PPE) Required!

Refrigerant in the presence of an open flame, spark, or electrical short produces toxic gases that are severe respiratory irritants which can cause serious injury or possible death. When working with or around hazardous chemicals, ALWAYS refer to the applicable Material Data Safety Sheets (MSDS) and OSHA/GHS (Global Harmonized System of Classification and Labelling of Chemicals) guidelines for information on allowable personal exposure levels, proper respiratory protection, and handling instructions.

⚠ Danger

Refrigerant Vapor Hazard!

Do not inhale refrigerant. Use caution when working with refrigerant or a refrigeration system in any confined area with a limited air supply. Refrigerant displaces air and can cause oxygen depletion, resulting in suffocation and possible death. When working with or around hazardous chemicals, ALWAYS refer to the applicable Material Data Safety Sheets (MSDS) and OSHA/GHS (Global Harmonized System of Classification and Labelling of Chemicals) guidelines for information on allowable personal exposure levels, proper respiratory protection, and handling instructions.

⚠ Danger

Risk of Injury!

Keep your hands, clothing, and tools clear of fans and/or belts when working on a unit that is running or when opening or closing compressor service valves. Loose clothing might entangle moving pulleys or belts, causing serious injury or possible death.

⚠ Warning

Hazard of Explosion!

Never close the compressor discharge service valve when the unit is operating. Never operate the unit with the discharge valve closed (front seated). This condition increases internal pressure, which can cause an explosion.

⚠ Warning

Personal Protective Equipment (PPE) Required!

Always wear goggles or safety glasses and proper PPE when working on a unit. Refrigerant liquid, oil, and battery acid can permanently damage your eyes. When working with or around hazardous chemicals, ALWAYS refer to the applicable Material Data Safety Sheets (MSDS) and OSHA/GHS (Global Harmonized System of Classification and Labelling of Chemicals) guidelines for information on allowable personal exposure levels, proper respiratory protection, and handling instructions.

⚠ Warning

Equipment Damage and Risk of Injury!

Never drill holes into the unit unless instructed by Thermo King. Holes drilled into high voltage cables could cause an electrical fire, severe personal injury, or even death.

⚠ Warning

Risk of Injury!

When using ladders to install or service refrigeration systems, always observe the ladder manufacturer's safety labels and warnings. A work platform or scaffolding is the recommended method for installations and servicing.

Notice

Equipment Damage!

All unit mounting bolts must be installed, be the correct length for their application, and torqued to specifications. Missing bolts, incorrect bolt lengths and improper torque specifications can damage equipment and void the warranty.

Battery Installation and Cable Routing

⚠ Warning

Hazard of Explosion!

An improperly installed battery could result in a fire, explosion, or injury. A Thermo King approved battery must be installed and properly secured to the battery tray.

⚠ Warning

Hazard of Explosion!

Improperly installed battery cables could result in a fire, explosion, or injury. Battery cables must be installed, routed, and secured properly to prevent them from rubbing, chaffing, or making contact with hot, sharp, or rotating components.

⚠ Warning

Fire Hazard!

Do not attach fuel lines to battery cables or electrical harnesses. This has the potential to cause a fire and could cause serious injury or death.

⚠ Warning

Hazard of Explosion!

Always cover battery terminals to prevent them from making contact with metal components during battery installation. Battery terminals grounding against metal could cause the battery to explode.

⚠ Caution

Hazardous Service Procedures!

Set all unit electrical controls to the OFF position before connecting battery cables to the battery to prevent the unit from starting unexpectedly and causing personal injury.

Notice

Equipment Damage!

Do not connect other manufacturers' equipment or accessories to the unit or to the Thermo King batteries unless approved by Thermo King. Failure to do so can result in severe damage to equipment and void the warranty.

Refrigerant Hazards

⚠ Warning

Personal Protective Equipment (PPE) Required!

Refrigerant in a liquid state evaporates rapidly when exposed to the atmosphere, freezing anything it contacts. Wear butyl lined gloves and other clothing and eye wear when handling refrigerant to help prevent frostbite. When working with or around hazardous chemicals, ALWAYS refer to the applicable Material Data Safety Sheets (MSDS) and OSHA/GHS (Global Harmonized System of Classification and Labelling of Chemicals) guidelines for information on allowable personal exposure levels, proper respiratory protection, and handling instructions.

Refrigerant Oil Hazards

⚠ Warning

Personal Protective Equipment (PPE) Required!

Protect your eyes from contact with refrigerant oil. The oil can cause serious eye injuries. Protect skin and clothing from prolonged or repeated contact with refrigerant oil. To prevent irritation, wash your hands and clothing thoroughly after handling the oil. Rubber gloves are recommended. When working with or around hazardous chemicals, ALWAYS refer to the applicable Material Data Safety Sheets (MSDS) and OSHA/GHS (Global Harmonized System of Classification and Labelling of Chemicals) guidelines for information on allowable personal exposure levels, proper respiratory protection, and handling instructions.

First Aid

REFRIGERANT

- **Eyes:** For contact with liquid, immediately flush eyes with large amounts of water and get prompt medical attention.
- **Skin:** Flush area with large amounts of warm water. Do not apply heat. Remove contaminated clothing and shoes. Wrap burns with dry, sterile, bulky dressing to protect from infection. Get prompt medical attention. Wash contaminated clothing before reuse.
- **Inhalation:** Move victim to fresh air and use CPR (cardio pulmonary resuscitation) or mouth-to-mouth resuscitation to restore breathing, if necessary. Stay with victim until emergency personnel arrive.
- **Frost Bite:** In the event of frost bite , the objectives of First Aid are to protect the frozen area from further injury, warm the affected area rapidly, and to maintain respiration.

REFRIGERANT OIL

- **Eyes:** Immediately flush with large amounts of water for at least 15 minutes. Get prompt medical attention.
- **Skin:** Remove contaminated clothing. Wash thoroughly with soap and water. Get medical attention if irritation persists.
- **Inhalation:** Move victim to fresh air and use CPR (cardio pulmonary resuscitation) or mouth-to-mouth resuscitation to restore breathing, if necessary. Stay with victim until emergency personnel arrive.
- **Ingestion:** Do not induce vomiting. Immediately contact local poison control center or physician.

ENGINE COOLANT

- **Eyes:** Immediately flush with large amounts of water for at least 15 minutes. Get prompt medical attention.
- **Skin:** Remove contaminated clothing. Wash thoroughly with soap and water. Get medical attention if irritation persists.
- **Ingestion:** Do not induce vomiting. Immediately contact local poison control center or physician.

ELECTRICAL SHOCK

Take IMMEDIATE action after a person has received an electrical shock. Get quick medical assistance, if possible.

The source of the shock must be quickly stopped, by either shutting off the power or removing the victim. If the power cannot be shut off, the wire should be cut with an non-conductive tool, such as a wood-handle axe or thickly insulated cable cutters. Rescuers should wear insulated gloves and safety glasses, and avoid looking at wires being cut. The ensuing flash can cause burns and blindness.

If the victim must be removed from a live circuit, pull the victim away with a non-conductive material. Use wood, rope, a belt or coat to pull or push the victim away from the current. DO NOT TOUCH the victim. You will receive a shock from current flowing through the victim's body. After separating the victim from power source, immediately check for signs of a pulse and respiration. If no pulse is present, start CPR (cardio pulmonary resuscitation). If a pulse is present, respiration might be restored by using mouth-to-mouth resuscitation. Call for emergency medical assistance.

Fuel Tank Mounting

⚠ Danger

Risk of Injury!

An improperly installed fuel tank could lead to serious injury or death. Consult your trailer manufacturer for specific details on proper fuel tank installation and recommendations.

⚠ Warning

Equipment Damage!

NEVER remove or install any other component in place of the fuel tank air vent. The factory installed fuel tank air vent must be in place and functional for the Thermo King unit's fuel system to operate correctly and for the fuel tank to remain in compliance with Federal Motor Carrier Safety Administration specifications (title 49, paragraph 393.67). A plugged or restricted fuel tank air vent can result in premature damage to the fuel pump and could also cause severe damage to the fuel tank.

Fuel Line Installation

⚠ Danger

Fire Hazard!

Leaking fuel lines could cause a fire resulting in death or serious injury. All fuel line fittings must be tight and leak free.

⚠ Danger

Fire Hazard!

Do not route fuel lines with battery cables or electrical wires, as this could cause a fire.

Trailer Requirements

Swing Radius and King Pin Requirements

Important: VERIFY SWING RADIUS AND KING PIN DIMENSIONS BEFORE INSTALLING THE UNIT.

Notice

Equipment Damage!

The minimum clearance required for the swing radius must be 1306.3 mm (51.43 in.) or severe damage to the equipment will result. VERIFY THIS DIMENSION BEFORE INSTALLING UNIT!

Notice

Equipment Damage!

The minimum distance from the king pin to the front of the trailer must be at least 609.6 mm (24.00 in.) or severe damage to the equipment will result. VERIFY THIS DIMENSION BEFORE INSTALLING UNIT! See "Swing Radius and King Pin Requirements".

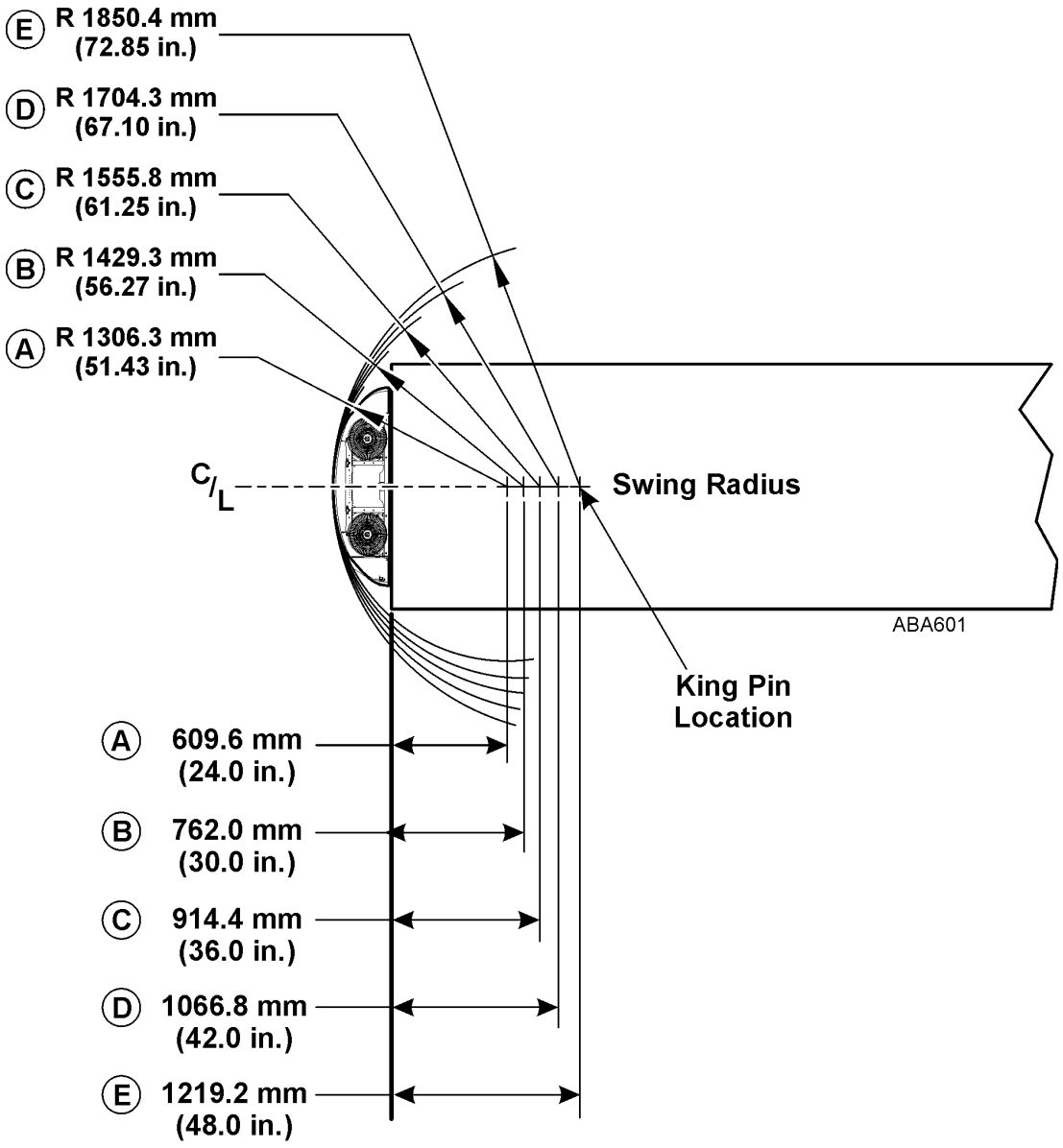

Evaporator Opening Requirements

⚠ Danger

Risk of Injury!

The front wall of the trailer must be structurally strong enough to support the weight of the refrigeration unit.

Important: *Location of unit mounting bolts and evaporator opening in front wall is critical. VERIFY ALL DIMENSIONS BEFORE INSTALLING UNIT. Refer to the illustration provided.*

Note: *It may be necessary to relocate the trailer's front corner clearance lights to the corner radius of the trailer to prevent damage.*

Note: *Verify adequate clearance is available for trailer fresh air exchange doors, if applicable.*

EVAPORATOR OPENING REQUIREMENTS
FRONT VIEW

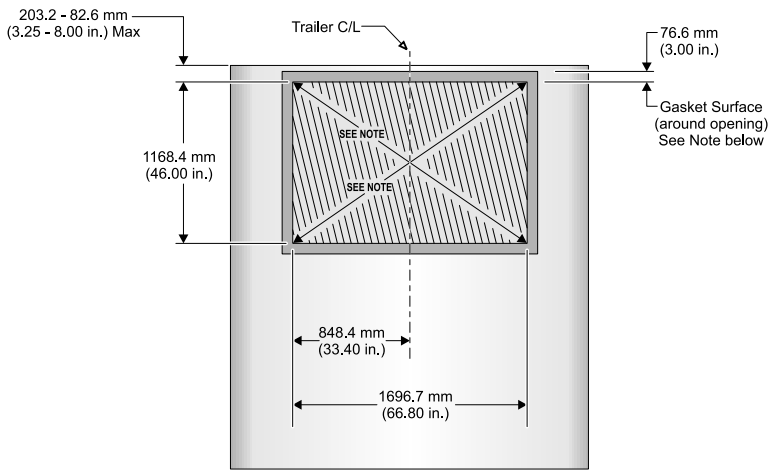

NOTE: Corners of Evaporator opening MUST be Square. The diagonal measurement must be within 3.2 mm (0.12 in.).

NOTE: Gasket Surface **must** be free of rivets, seams, & bolt heads

UNIT MOUNTING BOLT LOCATIONS
FRONT VIEW

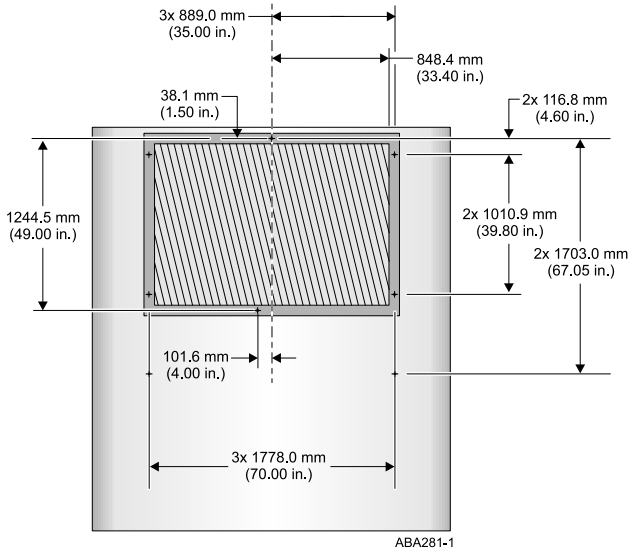

Mounting Hardware Requirements

Unit Mounting Bolts

⚠ Danger

Risk of Injury!

Eight mounting bolts must be installed to properly secure the unit to the trailer front wall. Failure to do so could result in severe damage to equipment, void the warranty, or cause personal injury or death.

Important: *The location of the unit mounting bolts in the front wall of the trailer is critical for proper unit installation. Refer to the illustration provided.*

The following mounting bolt requirements must be adhered to:

- All eight mounting bolts must be installed to secure unit to trailer.
- Surface of all mounting bolts are to be flat within 2.50 mm (0.10 in.).
- All mounting bolts must be square with the front wall and securely fastened to the trailer wall in such a manner to allow the mounting nuts be torqued to 82 N•m (60 ft. lbs.) from outside the trailer.
- **Six** unit mounting bolts must extend a **minimum** 57.20 mm (2.25 in.) and a **maximum** of 69.85 mm (2.75 in.) beyond the surface of the front wall.
- **One** unit mounting bolt must extend a **minimum** 44.45 mm (1.75 in.) and a **maximum** of 63.5 mm (2.50 in.) beyond the surface of the front wall.
- **One** unit mounting bolt must extend a **minimum** 57.20 mm (2.25 in.) and a **maximum** of 63.5 mm (2.50 in.) beyond the surface of the front wall.

  Note: *Refer to the illustration on the following page for mounting bolt locations and lengths.*

Mounting Bolt Specifications

⚠ Danger

Equipment Damage and Risk of Injury!!

The use of mounting bolts other than those specified could result in severe damage to equipment, void the warranty, or cause personal injury or death.

Use 1/2 in.-13 UNC - 28 Rolled thread grade 5, medium carbon steel bolts and locking nuts. All hardware must be zinc plated with dichromate finish.

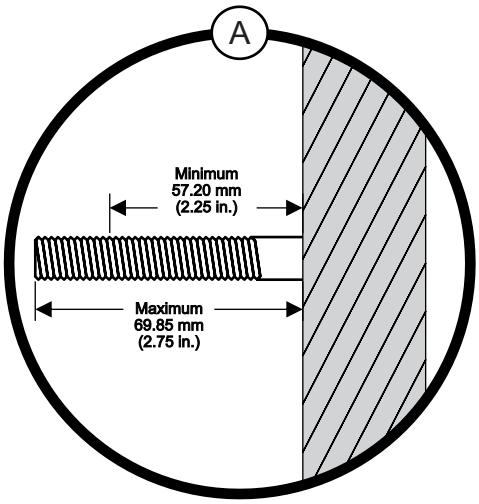
A
Minimum
57.20 mm
(2.25 in.)
Maximum
69.85 mm
(2.75 in.)

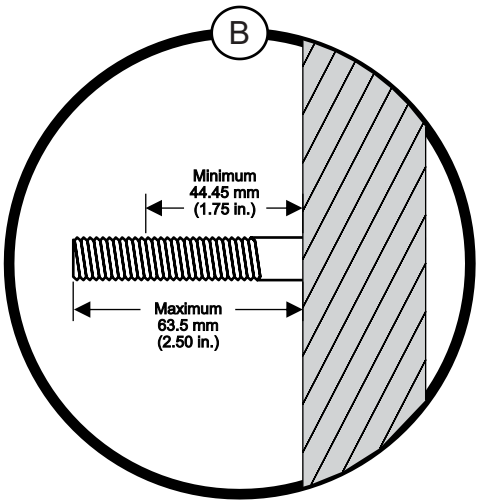
B
Minimum
44.45 mm
(1.75 in.)
Maximum
63.5 mm
(2.50 in.)

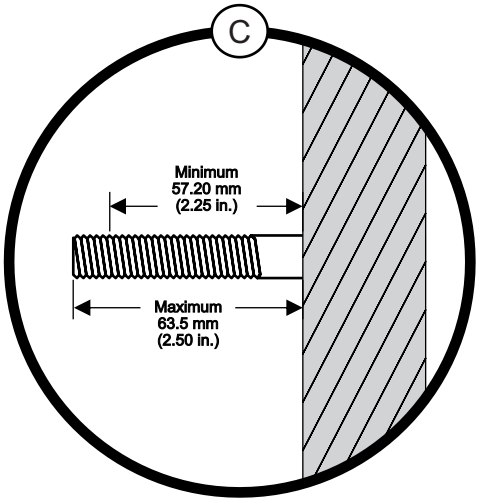
C
Minimum
57.20 mm
(2.25 in.)
Maximum
63.5 mm
(2.50 in.)

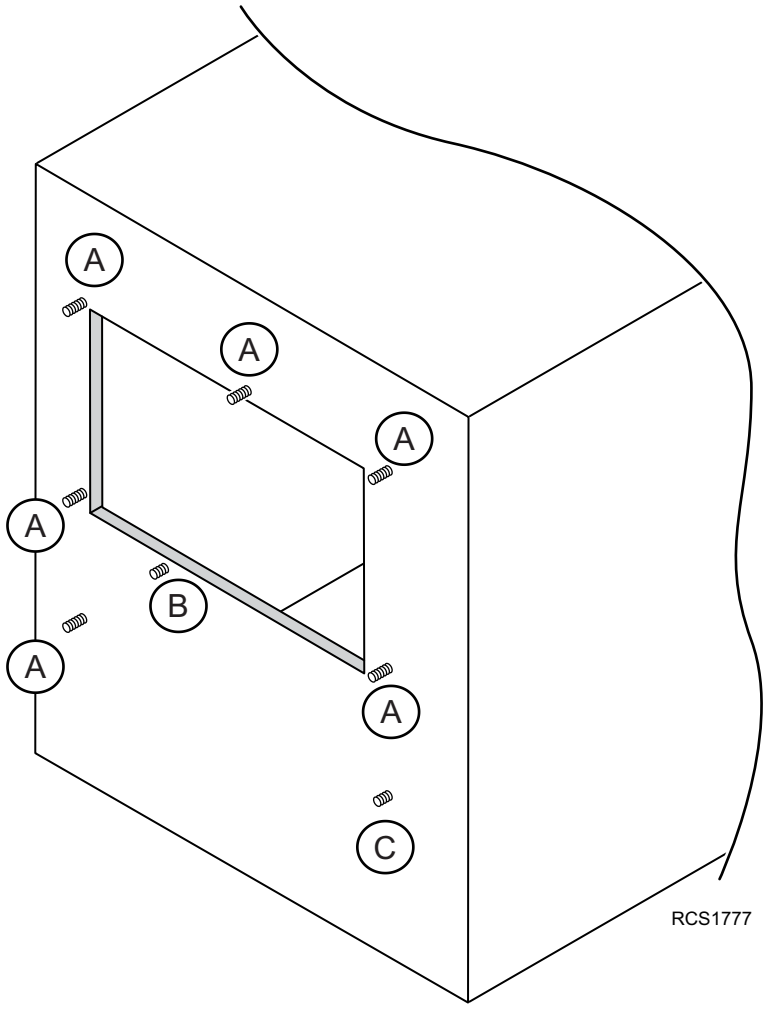
A
A
A
A
B
A
A
C
RCS1777

Unit Dimensions

Important: *Adequate clearance must be provided to allow for routine service and maintenance of the Thermo King unit. Refer to the illustrations provided.*

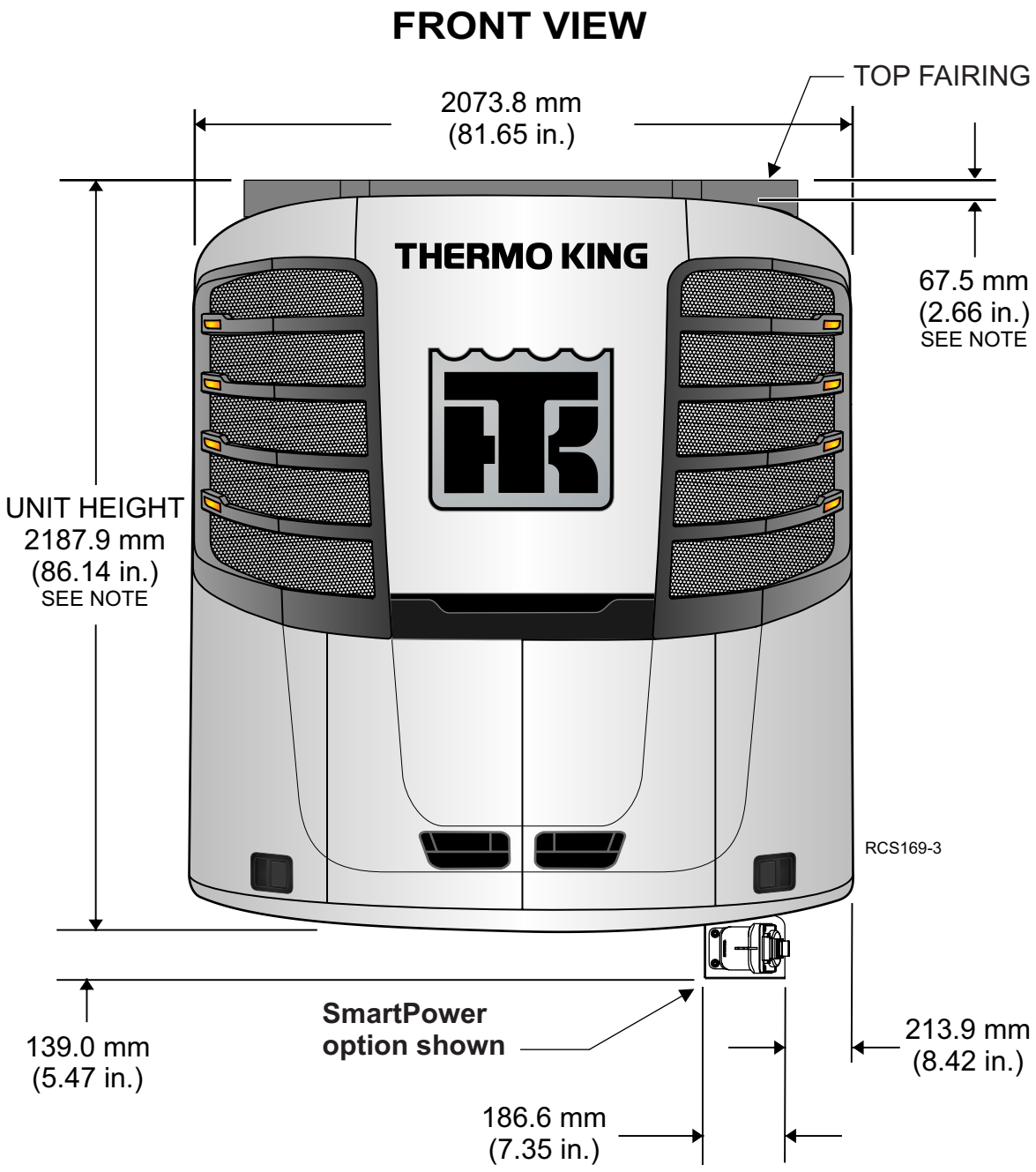

NOTE: The unit height shown includes the top fairing. Some applications such as Domestic Refrigerated Containers (DRC) and Trailer On Flat Car (TOFC) with an intermodal guard will not have a top fairing. The unit height for these applications would be 67.5 mm (2.66 in) less.

REAR VIEW

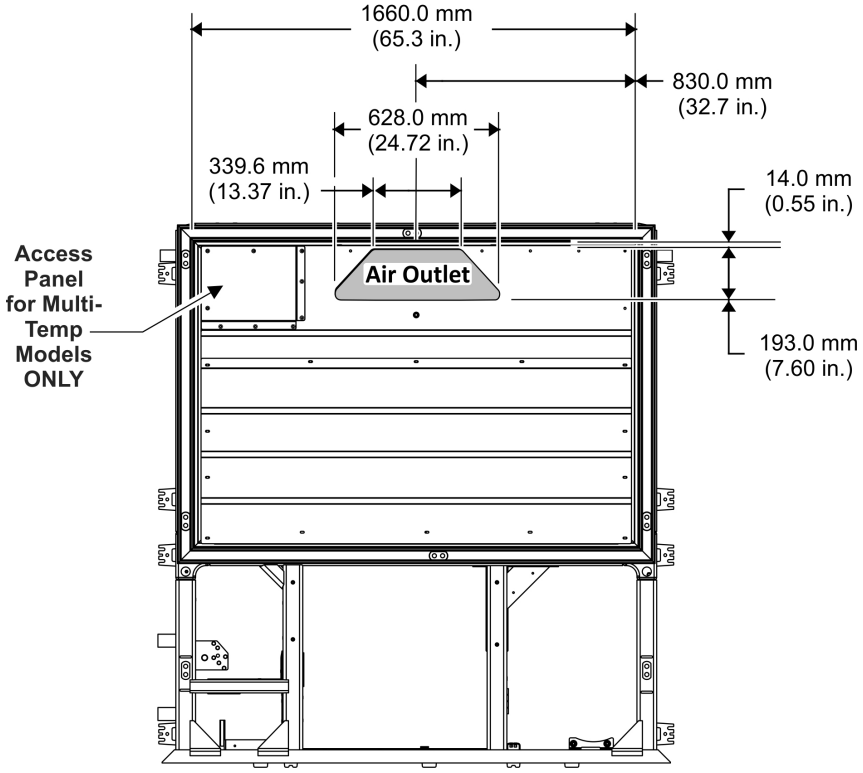

REAR VIEW DE

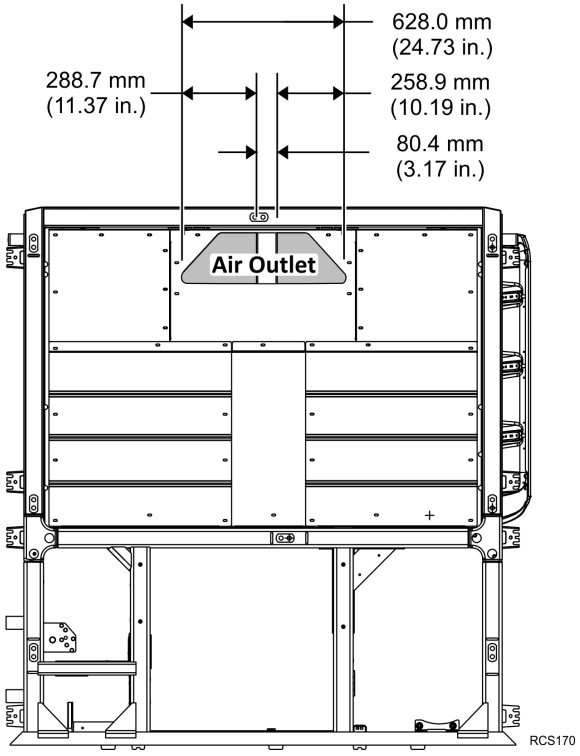

Top View
Upper Grille Radii

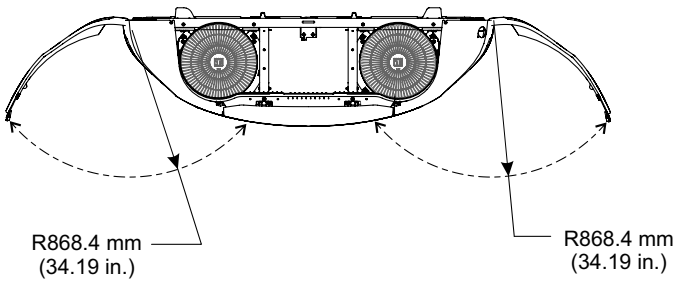

Top View
Lower Door & Panel Radii

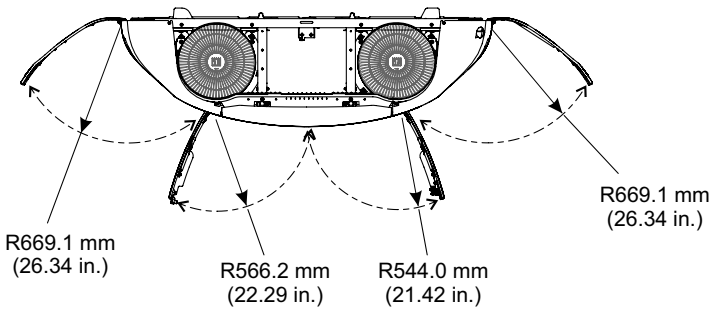

Side View
Top Door Radius

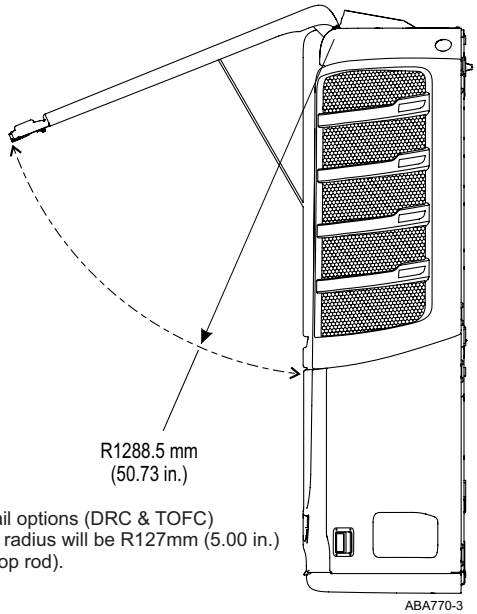

NOTE: For rail options (DRC & TOFC) door opening radius will be R127mm (5.00 in.) (with short prop rod).

ABA770-3

SIDE VIEW

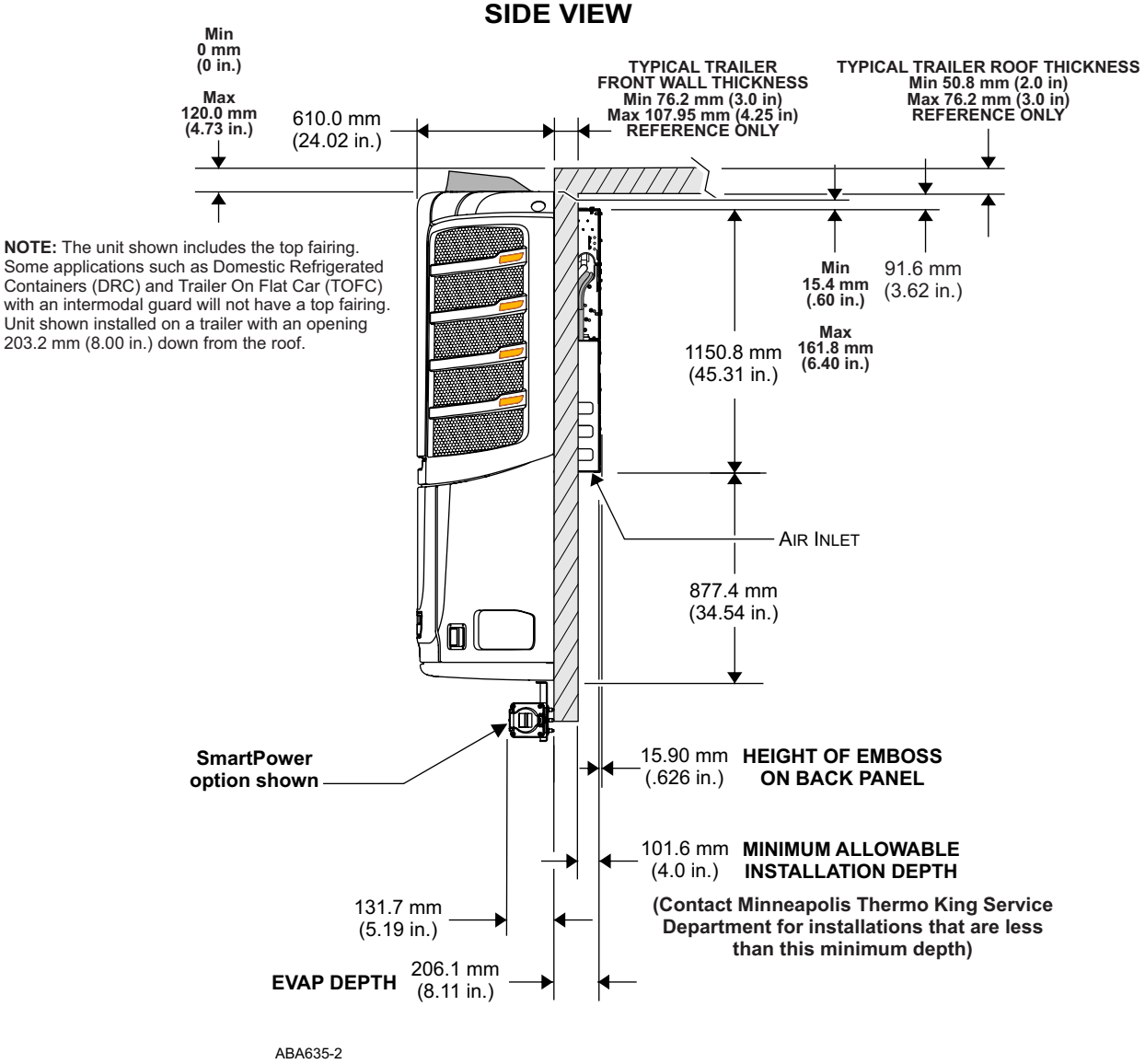

ABA635-2

Evaporator Blower Outlet Housing Updated in 2023

See Service Bulletin SB956 Precedent® New Style Evaporator Blower Outlet Housing

A new style evaporator blower outlet housing has been released for all Precedent units beginning in 2023.

The new evaporator blower housing has a vertical support molded into the center of the discharge outlet to prevent warpage during manufacturing and shipping. The vertical support does not significantly affect discharge air flow and is designed to be left in the unit after unit install. During installation of the unit, if the support is found broken or otherwise damaged, it must be removed completely. If removal is necessary, a cutting tool to cleanly separate the center support from the blower housing outlet is required. Do not attempt to bend and snap off the support; damage to the evaporator outlet may occur.



Unit Weight

Approximate Weight — Precedent Single Temperature Units:	
C-600, S-600, and S-700	850 kg (1873 lbs.)
with SmartPower™ 12 HP/230V	953 kg (2102 lbs.)
with SmartPower™ 12 HP/460V	969 kg (2137 lbs.)
with SmartPower™ 19 HP/460V	969 kg (2137 lbs.)

Battery Selection Guide

Notice

Equipment Damage!

Do not connect other manufacturers' equipment or accessories to the unit or to the Thermo King batteries unless approved by Thermo King. Failure to do so can result in severe damage to equipment and void the warranty.

Important: *The specified battery, electrical wiring and electronic controls were designed to operate and maintain only the Thermo King refrigeration system and factory authorized Thermo King options.*

Trailer units are designed for one, Group C31,12 volt battery supplied by the installer.

The battery must be suitable for deep cycling, heavy duty and rated with a minimum of 95 amp/hr.

Note: *See the following table for Thermo King approved batteries.*

BATTERY APPLICATION TABLE	
925 CCA Wet Cell Thermo King ReliaMax 925N P/N 2030733 Threaded Stud P/N 2030732 SAE Post	1150 CCA Dry Cell (AGM) Thermo King EON P/N 2030550 Threaded Stud P/N 2030551 SAE Post
• Wet Cell Technology • Recommended for both warm and cold climates • High cranking power at low ambient temperatures • 18-24 month expected life *see note below	• Dry Cell (AGM) Technology • Recommended for extreme climates and for Rail Ready (RR), Domestic Refrigerated Container (DRC), and Trailer on Flat Car (TOFC) applications. • High cranking power at lower ambient temperatures • Suited for extreme temperatures • Best for high cycling applications (Cycle-Sentry use) • 5-7 year expected life
* NOTE: Wet cell battery life and maintenance requirements are determined by the operating environment and the charge/discharge rate (cycles) while the battery is in service. Higher ambient temperatures and frequent discharges will shorten a wet cell battery's overall life expectancy and increase maintenance requirement. If the unit is not going to be used for an extended period of time, turn the Microprocessor On/Off Power Switch to the OFF position to maximize battery life.	

Lifting Bar Dimensions

⚠ Warning

Risk of Injury!

Thermo King requires a 2 point lifting bar to safely lift and install units. A lifting bar can be made from the drawings provided using ASTM A514 Grade B Steel Plate (UNS K11630).

⚠ Warning

Risk of Injury!

The lifting bar and lifting device combined must be able to support minimum weight of 1360.8 kilos (1 1/2 tons).

Important: *Use forged clevis and pins, forged chain links and forged eyebolts with strength equal to total lift capacity of hoist mechanism and that meet all safety standards.*

Note: *Refer to the illustrations provided.*

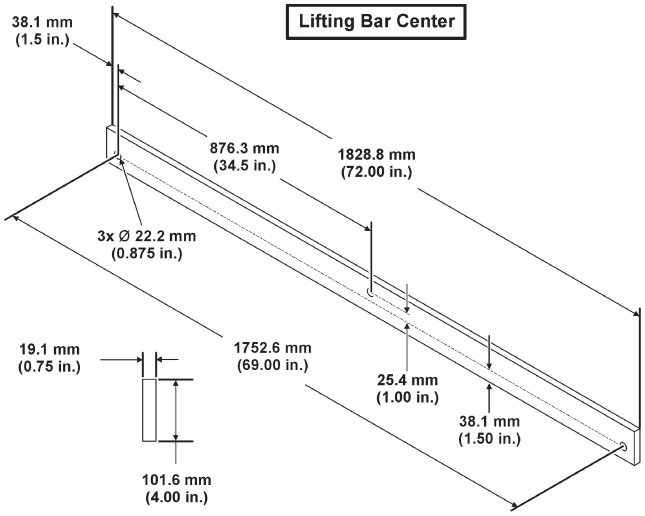

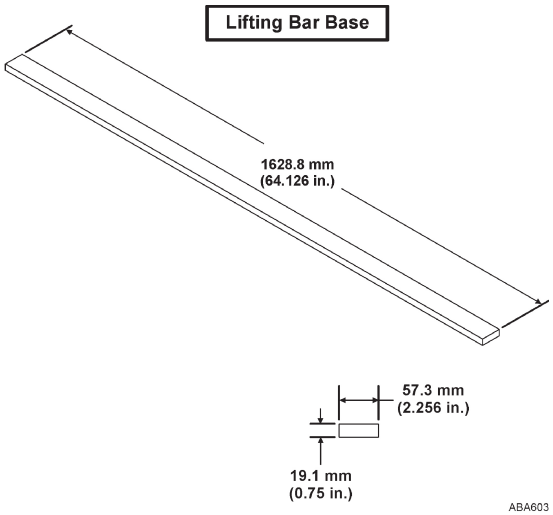

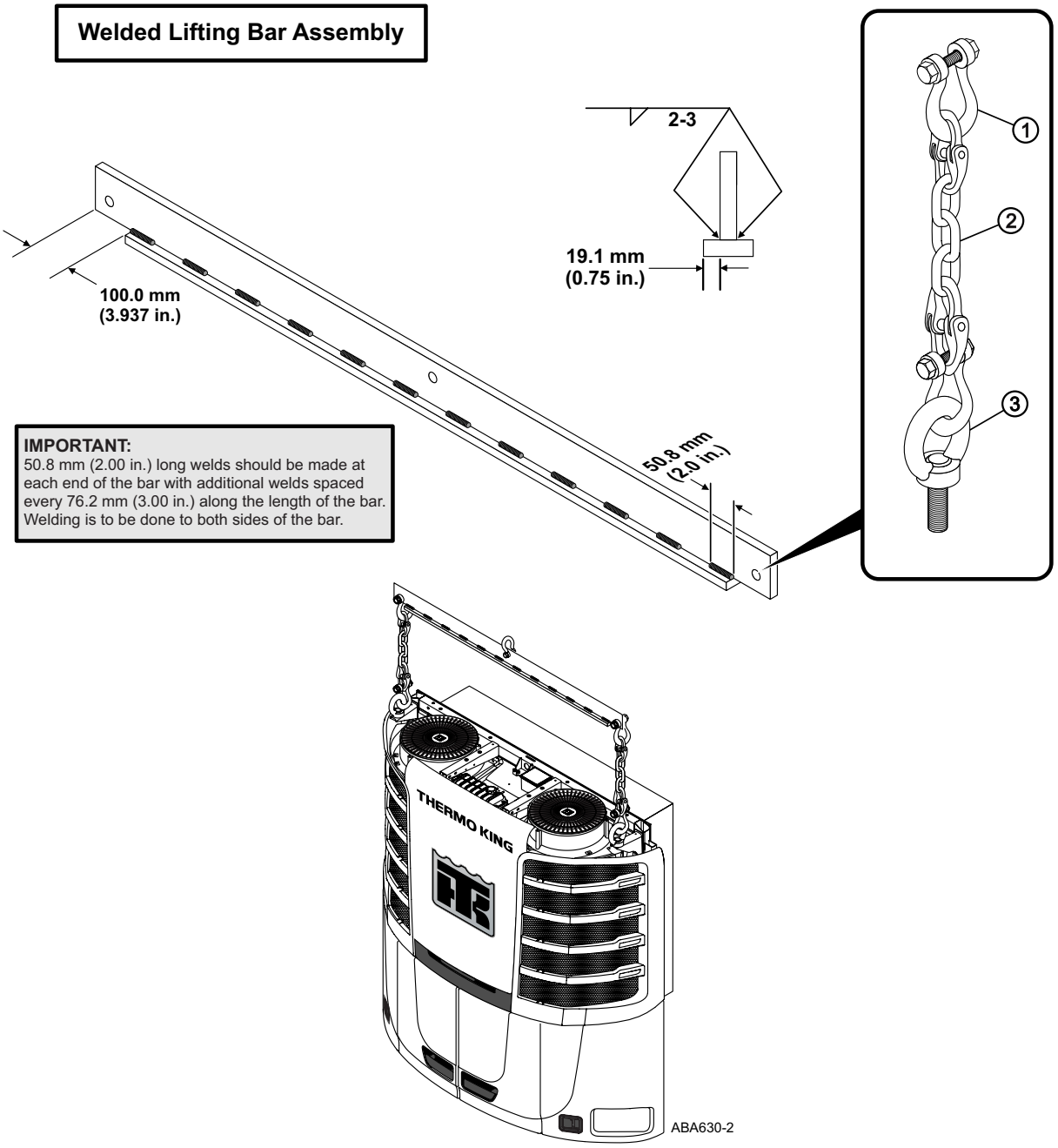

1.	Forged Clevis Pins
2.	Forged Chain Links
3.	Forged Eyebolts

Note: *These instructions are provided for fabricating the lifting bar used to install Precedent units. Thermo King is not the manufacturer of the lifting bar and is not responsible for material used or failure of this lifting device.*

Required Tools for Installation

1. Safety Glasses
2. Drill
3. Drill Bits
4. Tape Measure
5. Mechanics Tools
6. Lifting Bar
7. Work Platform (Recommended)
8. Torque Wrench
9. Forged Eyebolts (5/8–11)

Note: *Equipment such as scales, gauges, refrigerant leak detectors, and torque wrenches should be in good working condition and routinely calibrated to assure accurate readings.*

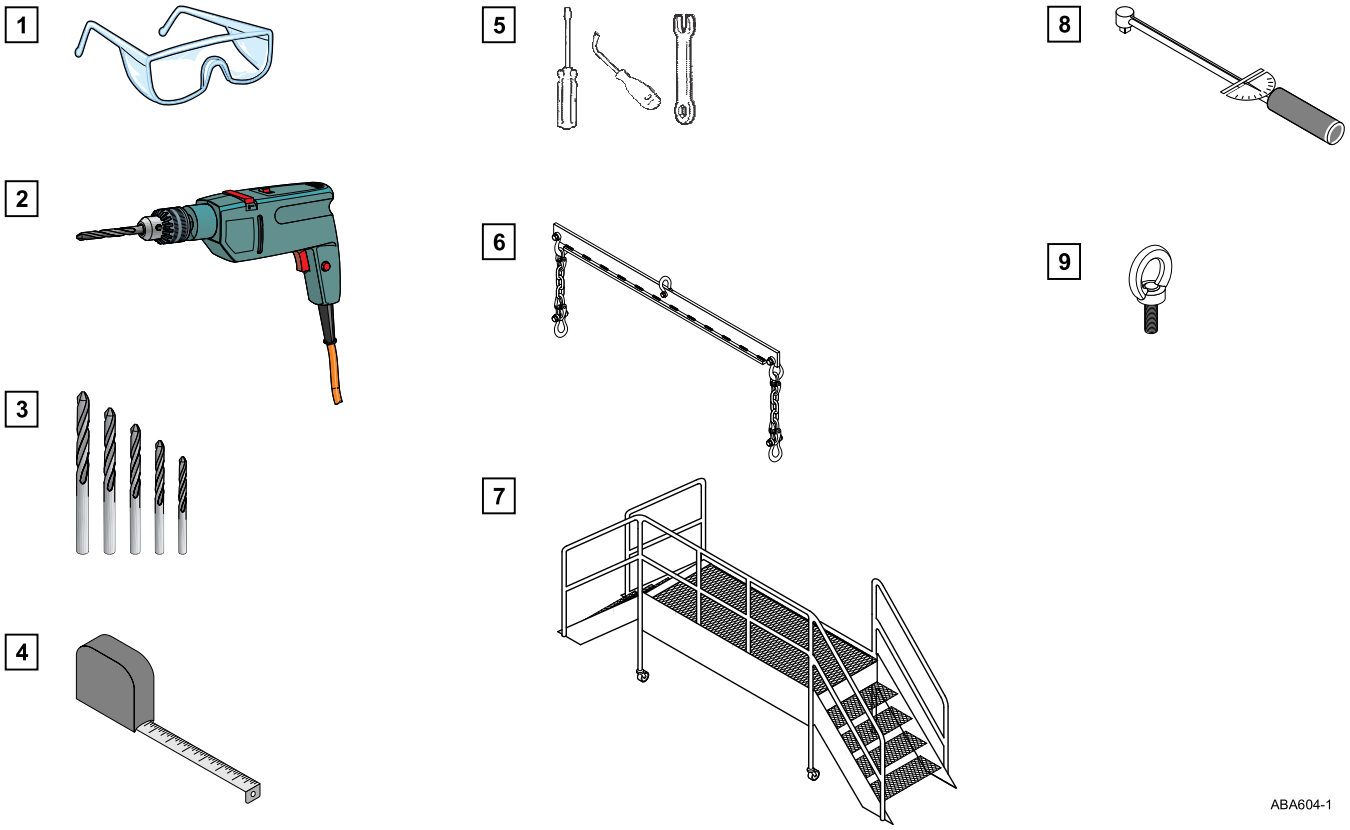

Installation Components – Trailer Applications

1 **Unit Mounting Kit**

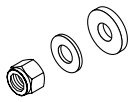

2 **Drain Tube Kit**

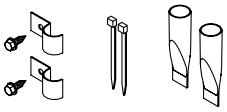

3 **Fuel Pump Kit**

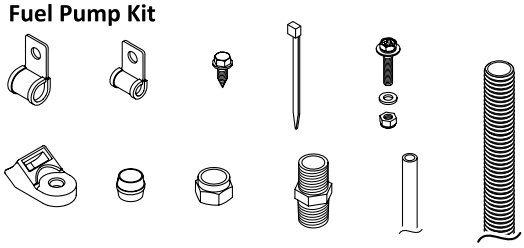

4 **Skin Mounting Kit**

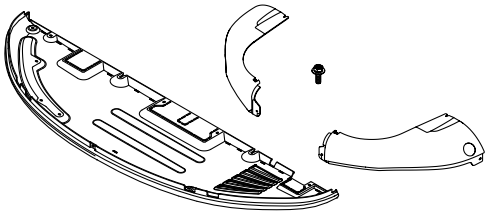

5 **Battery Mounting Kit**

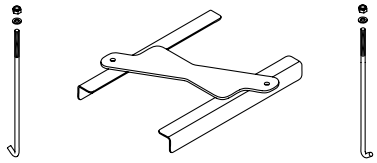

6 **UFLS Harness Kit**

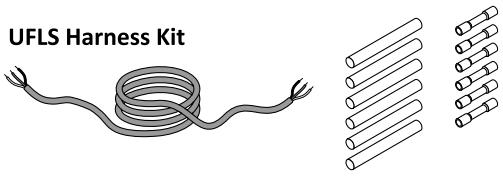

7 **Top Fairing Kit**

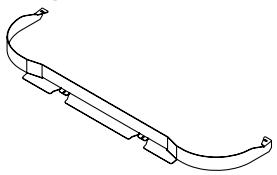

8 **(OPTION) SmartPower Kit**

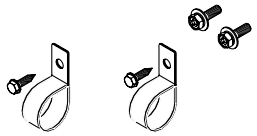

9 **Heat Shield & Mounting Screws**

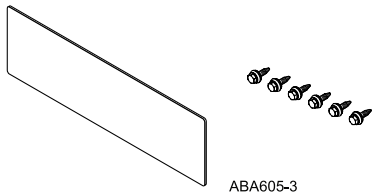

ABA605-3

Installation Components – RBC Applications

1 **Unit Mounting Kit**

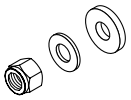

2 **Drain Tube Kit**

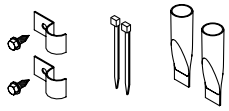

3 **Fuel Hardware Kit**

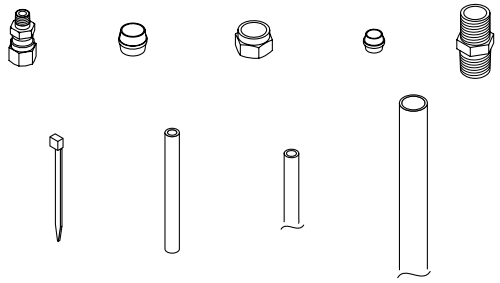

4 **Skin Mounting Kit**

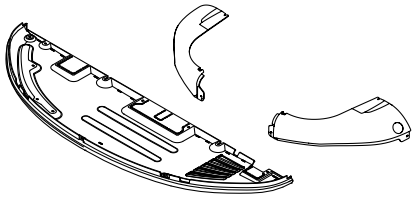

5 **Battery Mounting Kit**

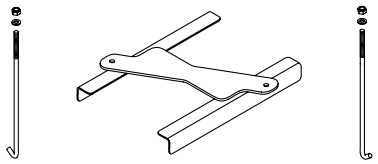

6 **Bottom Pan Grommets**



7 **Heat Shield & Mounting Screws**

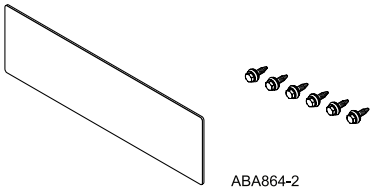

ABA864-2

Installation Components – DRC Applications

1 **Unit Mounting Kit**

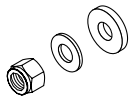

2 **Drain Tube Kit**

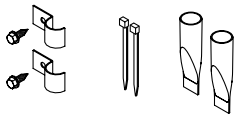

3 **Fuel Hardware Kit**

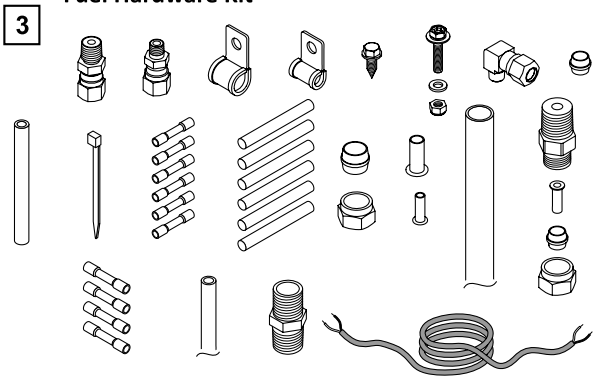

4 **Skin Mounting Kit**

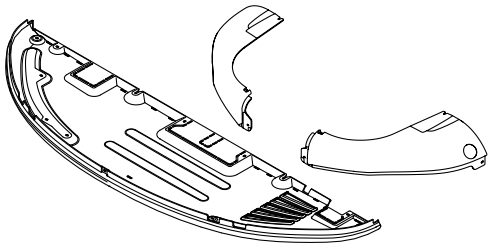

5 **UFLS Harness Kit**

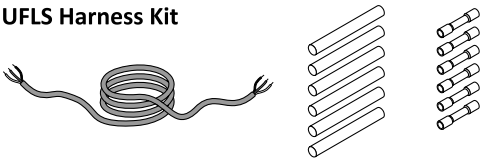

6 **Battery Mounting Kit**

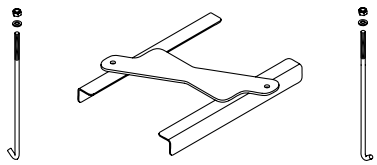

7 **Bottom Pan Grommet Kit**



8 **Heat Shield & Mounting Screws**

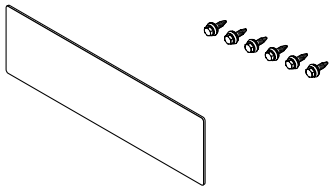

9 **Exhaust Tube Extension Components**

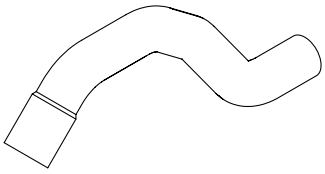

10

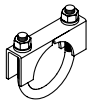

11

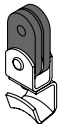

12



13



ABA865-2

Unpacking Unit

⚠ Warning

Risk of Injury!

Thermo King requires a 2 point lifting bar to safely lift and install units. A lifting bar can be made from the drawings provided using ASTM A514 Grade B Steel Plate (UNS K11630).

⚠ Warning

Risk of Injury!

Use only locking hooks to safely lift the unit. Failure to use locking hooks could result in severe damage to the equipment, void the warranty, or cause personal injury or death.

Note: *A lifting bar can be made from the drawings shown ("Lifting Bar Dimensions," p. 23) using ASTM A514 Grade B Steel Plate (UNS K11630).*

Units are shipped attached to disposable wooden pallet and wrapped with protective cardboard and plastic stretch wrap.

Note: *To avoid unnecessary damage to your unit, place the crated unit near the trailer prior to its removal. Refer to the illustration provided.*

Important: *DO NOT use a sharp knife to remove the stretch wrap or cardboard wrap as damage to the exterior of the unit will result.*

1. Carefully remove plastic stretch wrap from unit.
2. Carefully remove the top cardboard cover.
3. Carefully remove the outer cardboard wrap.
4. Remove installation kit boxes, bottom panel, and any other loose components from rear of unit.
5. Install two forged eyebolts into the top corners of the unit and attach the 2 point lifting bar with locking hooks to the eyebolts. Raise unit only enough to remove slack from lifting bar chains.
6. Remove hardware holding unit to wooden pallet.
7. Unit is now ready for installation.

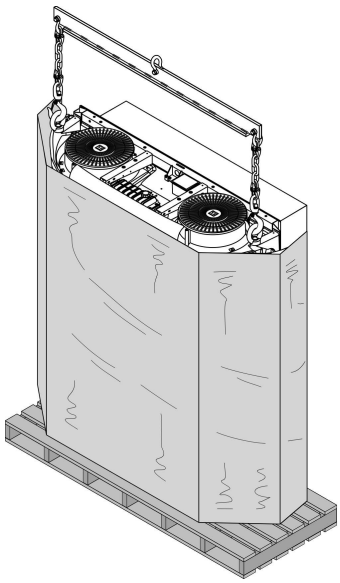

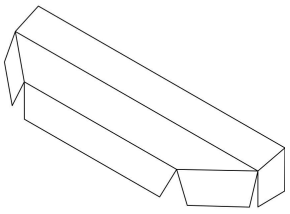

Installing Heat Shield

Note: *Heat shield and screws can be found loosely attached to the rear of the unit with band wraps.*

The supplied heat shield must be installed onto the front outside wall of the trailer prior to unit installation. The shield should be positioned approximately 76.2 mm (3.00 in.) down from the cutout and centered horizontally as shown.

1. Thoroughly clean the area shown with isopropyl alcohol to remove dirt, grease, wax, etc.
2. Starting at the top of the shield, peel approximately 25.4 mm (1.00 in.) of the backing liner from the shield, place shield onto trailer wall and progressively remove liner downward while applying pressure to the foil.
3. Once shield is installed, apply pressure to the remove wrinkles.

   Note: *Any remaining wrinkles have no effect on performance.*
4. Install provided sealing screws at each corner and top and bottom center of the shield.
5. The unit is now ready to be installed.

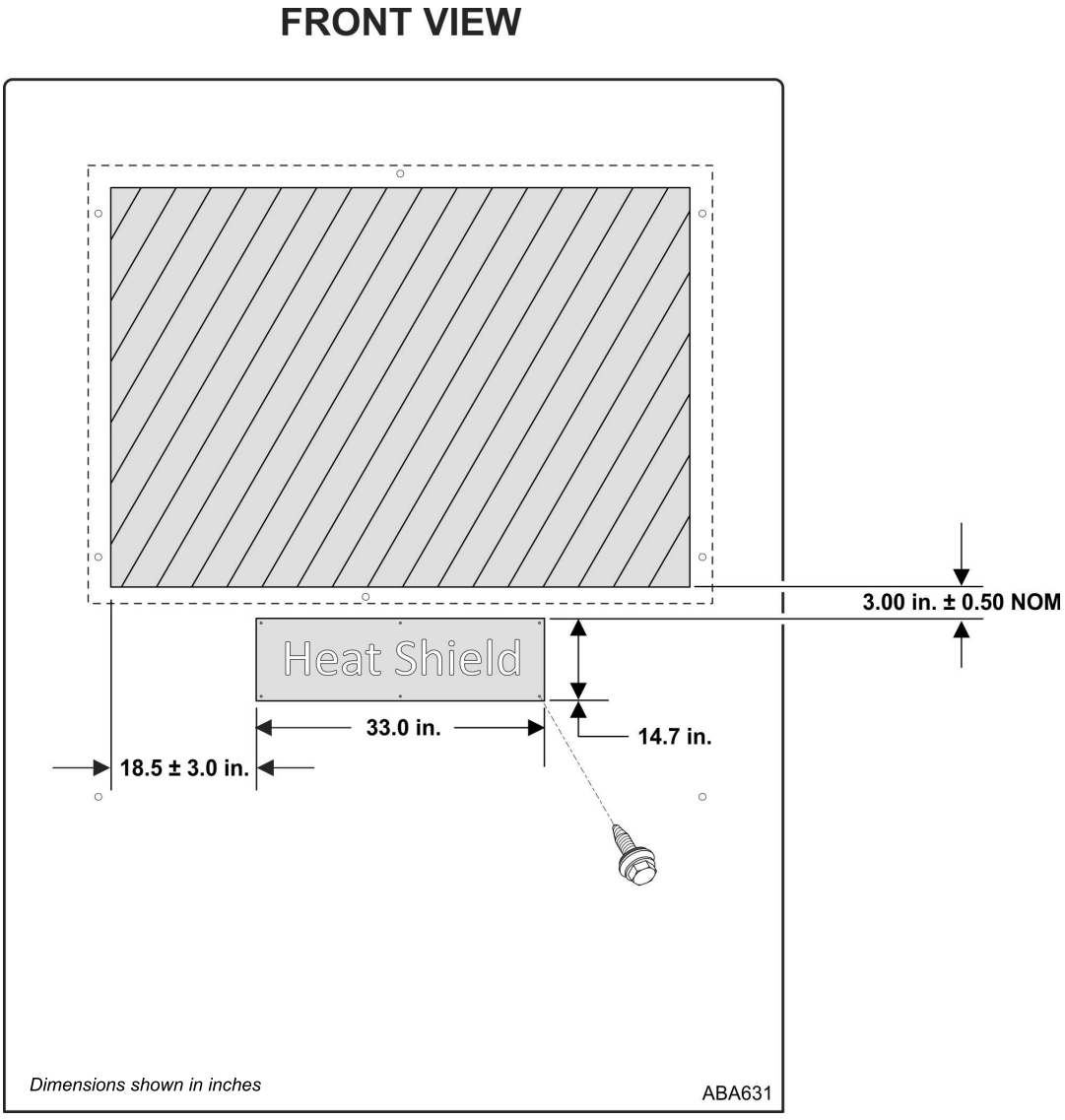

Installing Unit

⚠ Warning

Equipment Damage and Risk of Injury!

Do not use a forklift to install the unit. This could result in severe damage to equipment, void the warranty, or cause personal injury or death.

⚠ Warning

Risk of Injury!

Thermo King requires a 2 point lifting bar to safely lift and install units. A lifting bar can be made from the drawings provided using ASTM A514 Grade B Steel Plate (UNS K11630).

⚠ Warning

Risk of Injury!

Use only locking hooks to safely lift the unit. Failure to use locking hooks could result in severe damage to the equipment, void the warranty, or cause personal injury or death.

⚠ Warning

Equipment Damage and Risk of Injury!

Unit mounting nuts should be installed using hand tools or low speed (maximum 150 RPM) power tools and then torqued properly with a calibrated tool. Never use high speed power tools such as impact guns or impact wrenches as they overheat mounting hardware and damage the locking feature of the lock nut.

Note: *A lifting bar can be made from the drawings shown ("Lifting Bar Dimensions," p. 23) using ASTM A514 Grade B Steel Plate (UNS K11630).*

Unit Installation

Note: *Refer to the illustration on the following page.*

1. Raise unit up to the trailer opening and position onto the mounting bolts.
2. Attach thick washer, standard washer, and elastic stop nuts provided in the installation kit. Torque to 82 N•m (60 ft. lbs.).

Access to Mounting Bolts

Note: *Refer to the illustration on the following page — Detail II.*

a. Top side mounting hole through the hinged roadside grille.

b. Center side mounting hole through hinged roadside grille.

c. Lower side mounting hole through hinged roadside panel, behind hinged control box.

d. Center side mounting hole through hinged lower curbside door.

e. Lower side mounting hole through hinged curbside panel.

f. Center side mounting hole through hinged curbside grille.

g. Top side mounting hole through hinged curbside grille.

h. Top center mounting hole from top of the unit.

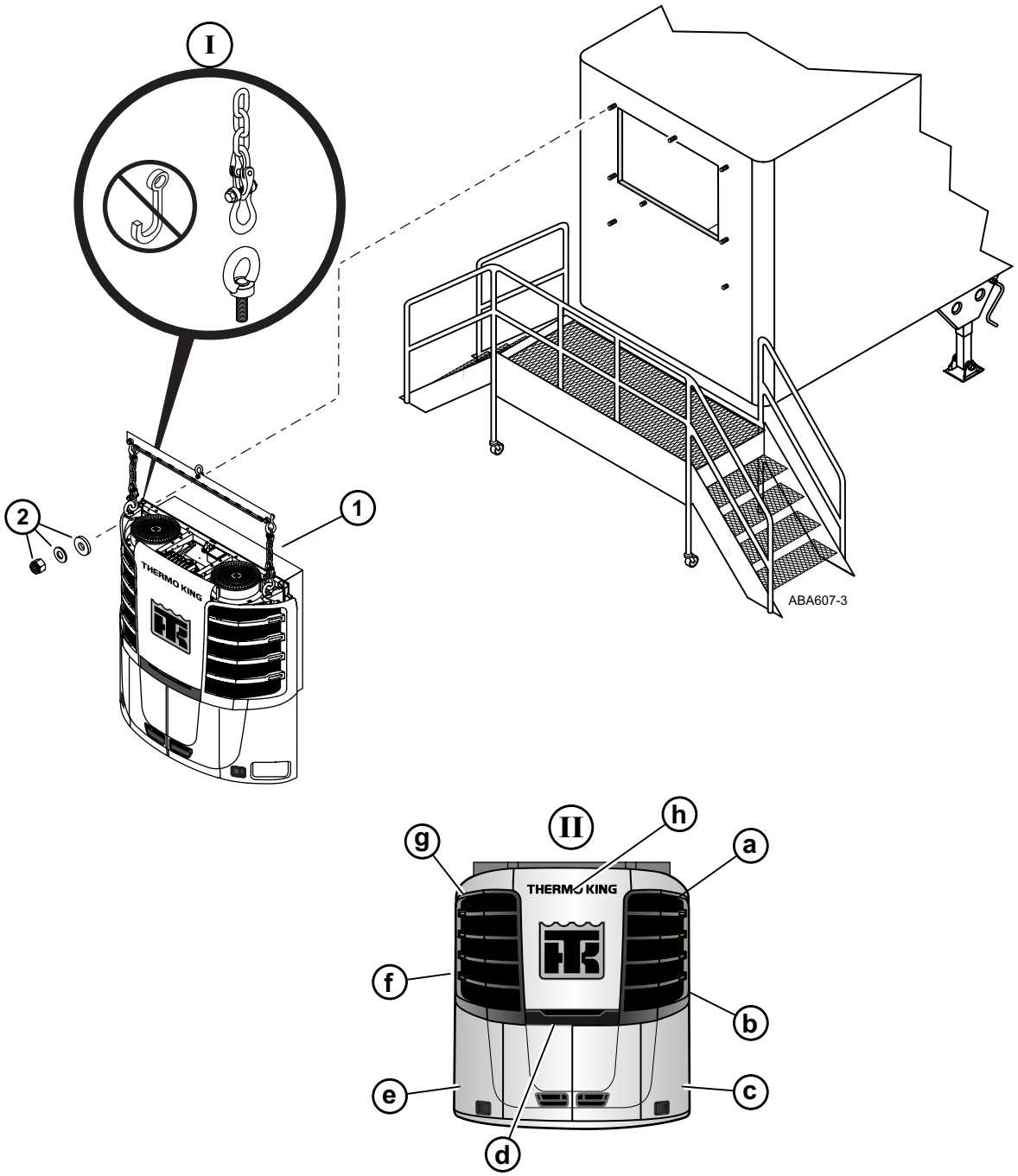
I
2
1
THERMO KING
ABA607-3
II
h
g
a
THERMO KING
f
b
e
c
d

Installing Drain Hoses and Coolant Overflow Hose – Trailer Applications

Note: *Refer to the illustration provided.*

1. Evaporator drain hoses should run straight down the trailer wall from each side of the unit with no kinks or bends.
2. Cut off excess hose and attach check valves with supplied band wraps.
3. Secure each hose to trailer wall with two clamps and screws as shown.

   Important: *Upper clamp location varies by individual application while lower clamps should be installed 127 mm (5.00 in.) up from the bottom of the drain valves and not be so tight as to restrict water drainage.*
4. Coolant overflow hose should run straight down the wall with no kinks or bends.
5. Secure the overflow hose to the evaporator drain hose with supplied bandwraps as shown

   Important: *The band wraps must not be so tight as to restrict water drainage.*

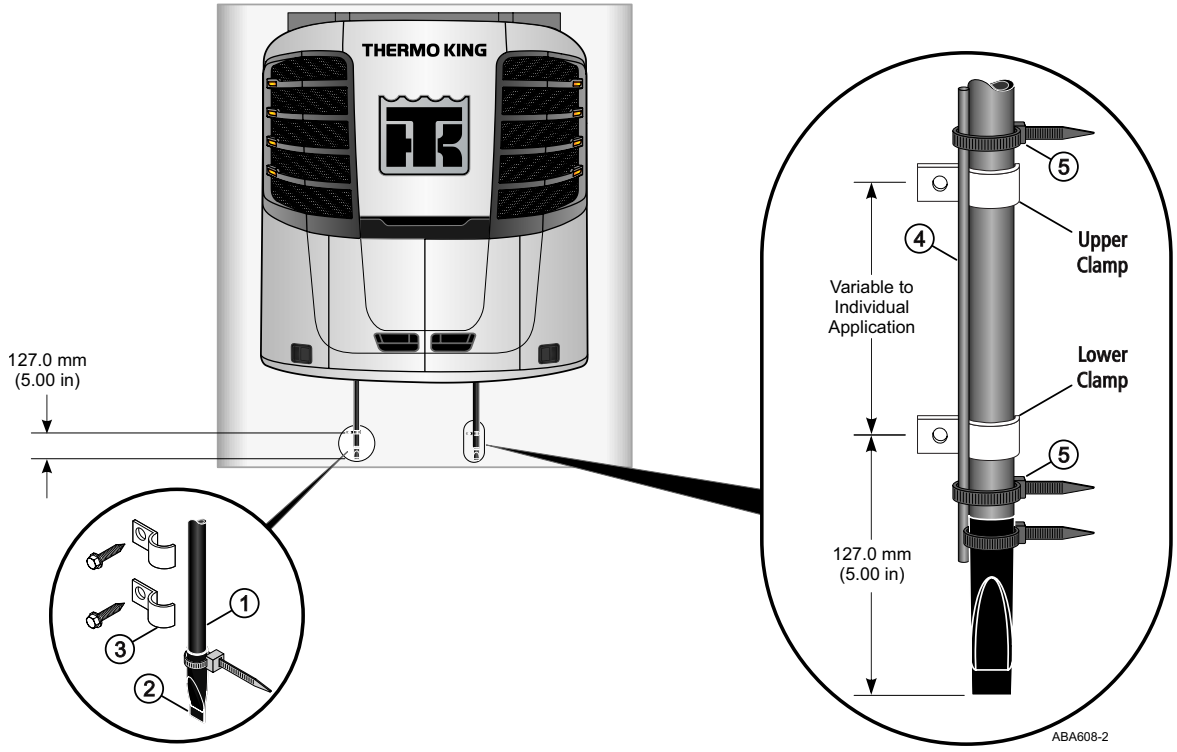

Installing Drain Hoses and Coolant Overflow Hose – DRC and RBC Applications

Installation Procedures

Note: *The drain hoses will need to be routed off to one side, behind the fuel tank, and down the front wall. Refer to the illustration provided.*

1. Evaporator drain hoses should run down from the unit with no kinks or sharp bends.
2. Secure each hose to the front wall with clamps and screws as shown.
3. Cut off excess hose and attach check valves with supplied band wraps.

Important: *Upper clamp location varies by individual application while lower clamps should be installed 127 mm (5.00 in.) up from the bottom of the drain valves and not so tight as to restrict water drainage.*

4. Coolant overflow hose should run straight down the wall with no kinks or bends.
5. Secure the overflow hose to the evaporator drain hose with supplied band wraps as shown.

Important: *The band wraps must not be so tight as to restrict water drainage.*

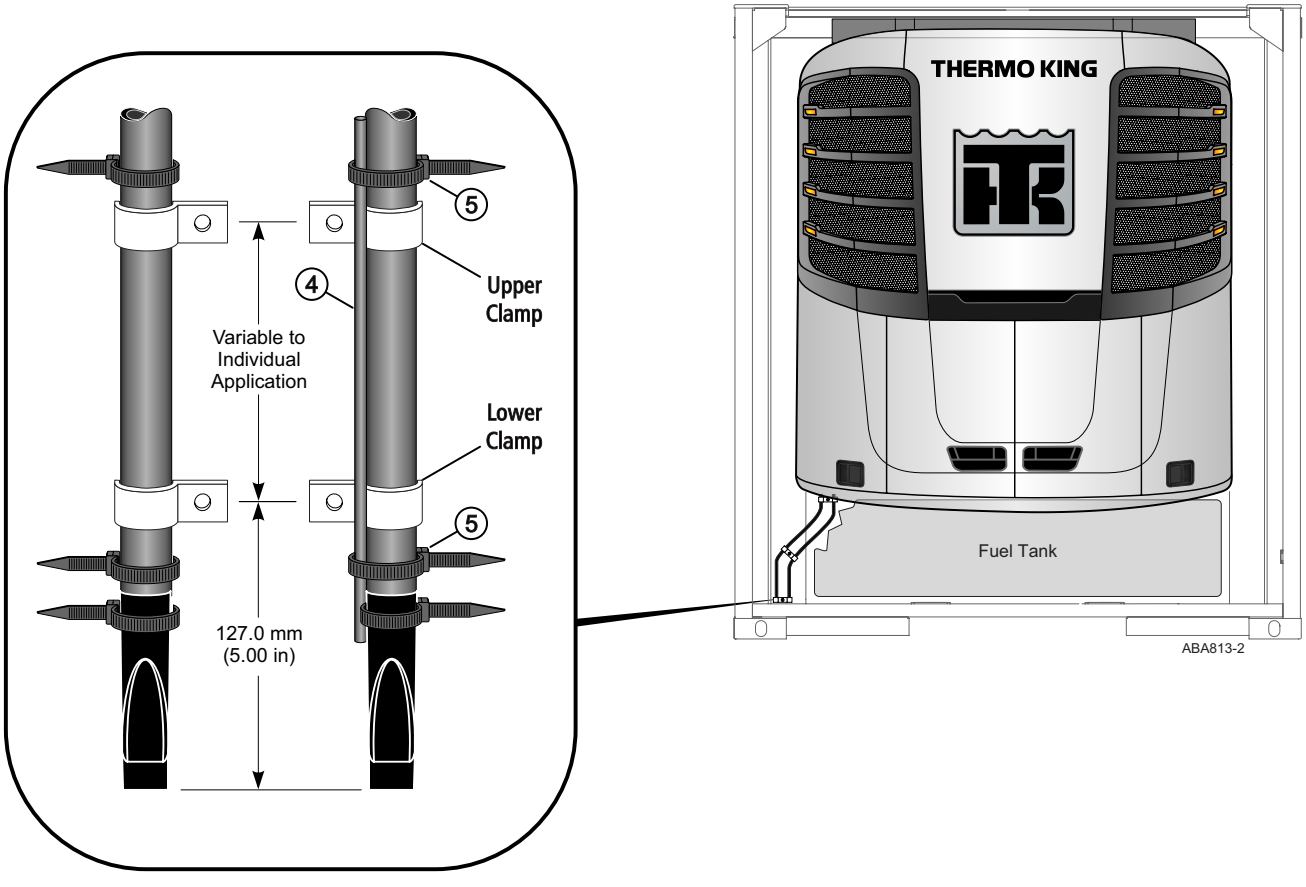

Installing Fuel Lines

C-Series Units Only

See "Safety Precautions," p. 5

Without Optional Fuel Heater

Important: *Using the wrong fuel system fittings may void your engine warranty! All Thermo King supplied fuel line fittings (except fuel line connector) are nickel plated brass for Precedent units.*

- **DO NOT** use fuel fittings (main body) made of brass, copper, zinc, zinc plated or galvanized steel where it would make direct contact with flowing diesel fuel. Diesel fuel flowing through these types of fittings allows those metals to leach into the fuel forming deposits on the injector tips which fouls them prematurely. Fuel fitting nuts, compression sleeves, and fuel line connectors made of brass are acceptable because diesel fuel does not flow across their surfaces
- **DO NOT** use PTFE (Polytetrafluoroethylene) thread sealing tape on fuel fittings in a Precedent unit. PTFE tape may allow strands into the fuel system that could plug the tight clearance fuel injectors causing failures.

Note: *Refer to the illustration provided.*

DETAIL I - Fuel lines should be routed in a protective housing with no kinks or sharp bends. Rubber grommets must be used when routing fuel lines through holes in metal.

DETAIL II - Secure all fuel lines with provided clamps.

DETAIL III - Both the fuel supply and the fuel return lines must be 25.4 (1.00 in.) from bottom of tank and the ends cut at 45 degree angle.

Important: *The band wrap, anchor tie and conduit provided in the installation kit are to be used to secure the fuel lines to the rear of the frame. The fuel lines must also be secured to the frame and the fuel pump bracket with the supplied clamps as shown.*

1. Install and route 3/8" fuel supply line from the fuel pump **INLET** fitting down to the fuel tank.
   a. Install 3/8" pass through fitting onto the fuel tank **SUPPLY** tube fitting.
   b. Cut end of 3/8" fuel line at 45 degrees and install sleeve and nut.
   c. Insert fuel line into fuel tank **SUPPLY** tube until it bottoms out, then pull line up 25.4 mm (1.00 in.) and tighten nut securely.
2. Install and route 3/8" fuel return line from fuel filter down to the fuel tank **RETURN** tube fitting.
   a. Install 3/8" pass through fitting onto the fuel tank **RETURN** tube fitting.
   b. Cut end of fuel line at 45 degrees and install sleeve and nut.
   c. Insert fuel line into fuel tank **RETURN** tube until it bottoms out, then pull line up 25.4 mm (1.00 in.) and tighten nut securely.
3. Remove plastic cap from the fuel tank air vent and point the outlet to the rear of the trailer.

Note: *Do not allow the unit to run out of fuel during the engine break-in period. Add a sufficient amount of fuel (approximately 20 gallons) to allow the unit to run for 8 to 12 hours during engine break-in and pre-delivery procedures.*

Figure 1. Without Optional Fuel Heater

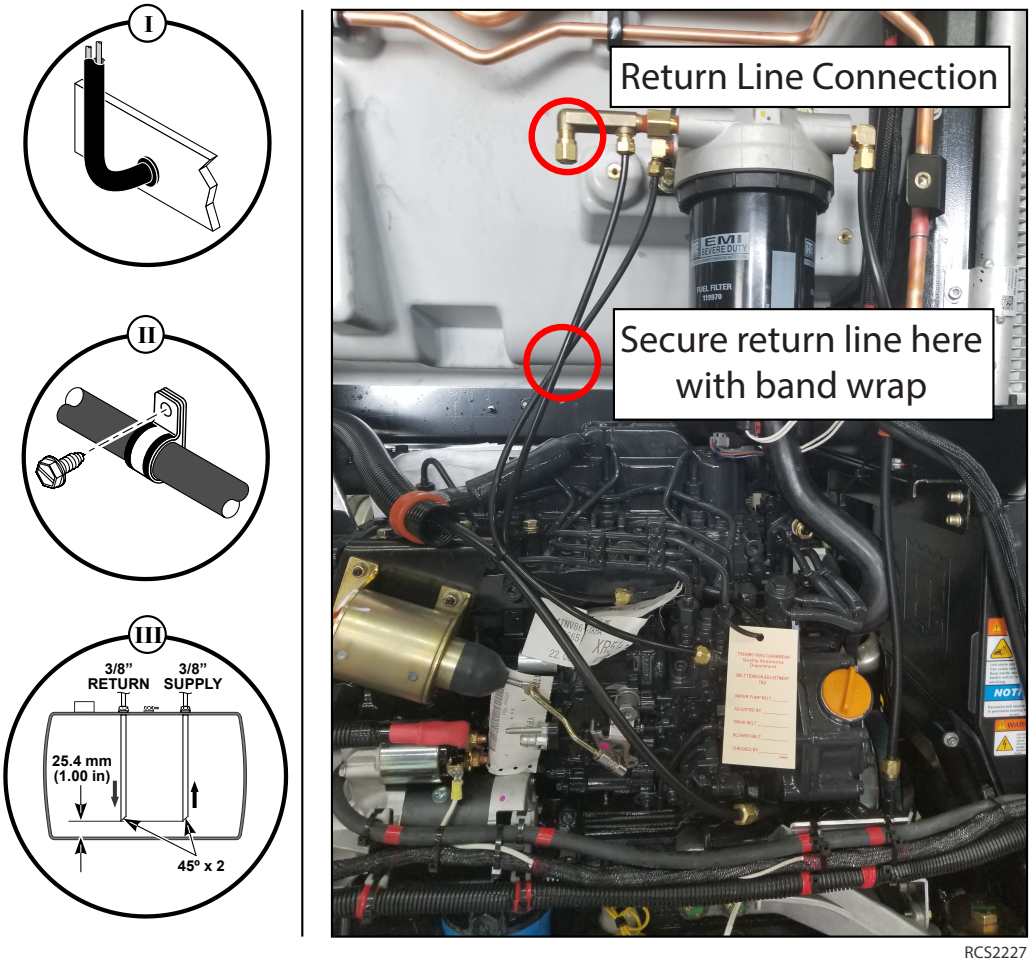

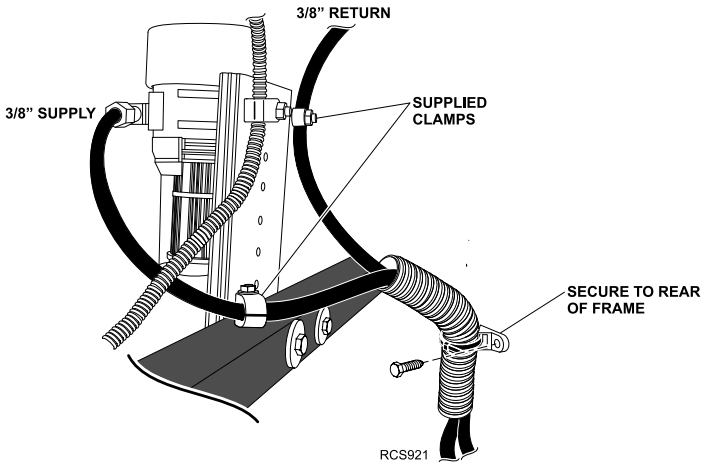

With Optional Fuel Heater

See "Safety Precautions," p. 5

Important: *DRC and RBC applications require the bottom pan be modified and installed onto the unit **BEFORE** routing fuel lines to the fuel tank. See Steps #5 and #6 of "Installing Top Covers and Bottom Pan – DRC and RBC Applications," p. 55.*

Important: *Using the wrong fuel system fittings may void your engine warranty! All Thermo King supplied fuel line fittings (except fuel line connector) are nickel plated brass for Precedent units.*

- **DO NOT** use fuel fittings (main body) made of brass, copper, zinc, zinc plated or galvanized steel where it would make direct contact with flowing diesel fuel. Diesel fuel flowing through these types of fittings allows those metals to leach into the fuel forming deposits on the injector tips which fouls them prematurely. Fuel fitting nuts, compression sleeves, and fuel line connectors made of brass are acceptable because diesel fuel does not flow across their surfaces
- **DO NOT** use PTFE (Polytetrafluoroethylene) thread sealing tape on fuel fittings in a Precedent unit. PTFE tape may allow strands into the fuel system that could plug the tight clearance fuel injectors causing failures.

Note: *Refer to the illustration provided.*

DETAIL I - Fuel lines should be routed in a protective housing with no kinks or sharp bends. Rubber grommets must be used when routing fuel lines through holes in metal.

DETAIL II - Secure all fuel lines with provided clamps.

DETAIL III - The fuel supply line must be 25.4 (1.00 in.) from bottom of tank and the end cut at 45 degree angle.

Important: *The conduit, clamp, screw and band wrap provided in the installation kit must be used to secure fuel lines to the rear of the frame.*

1. Cut end of 3/8" **SUPPLY** line at 45 degrees and install sleeve and nut.
   a. Insert line into fuel tank **SUPPLY** tube until it bottoms out, then pull line up 25.4 mm (1.00 in.) and tighten nut securely.
   b. Secure conduit to the rear of the frame with the clamp, screw and band wrap.
   c. Route **SUPPLY** line from fuel tank to unit, up through the conduit to **INLET** fitting on fuel heater and tighten nut securely.
2. Cut end of 3/8" **RETURN** line straight/flush and install sleeve and nut.
   a. Insert line into fuel tank **RETURN** tube and tighten nut securely.
   b. Route **RETURN** line from fuel tank to unit, up through the conduit to **OUTLET** fitting on the fuel filter and tighten nut securely
3. Remove plastic cap from the fuel tank air vent and point the outlet to the rear of the trailer.

Note: *Do not allow the unit to run out of fuel during the engine break-in period. Add a sufficient amount of fuel (approximately 20 gallons) to allow the unit to run for 8 to 12 hours during engine break-in and pre-delivery procedures.*

Figure 2. With Optional Fuel Heater

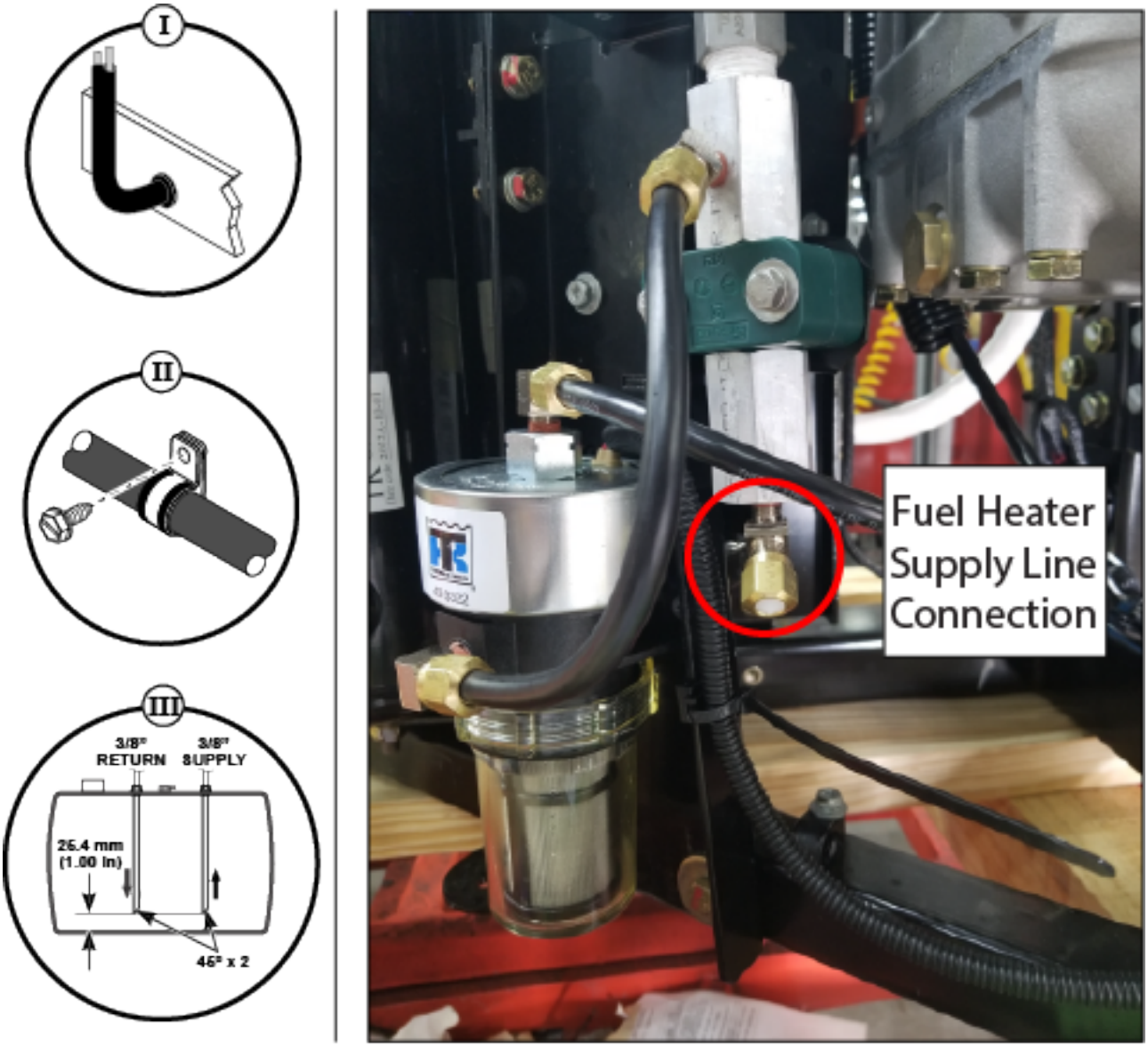

S-Series Units Only

Without Optional Fuel Heater

See "Safety Precautions," p. 5

Important: *Using the wrong fuel system fittings may void your engine warranty! All Thermo King supplied fuel line fittings (except fuel line connector) are nickel plated brass for Precedent units.*

- **DO NOT** use fuel fittings (main body) made of brass, copper, zinc, zinc plated or galvanized steel where it would make direct contact with flowing diesel fuel. Diesel fuel flowing through these types of fittings allows those metals to leach into the fuel forming deposits on the injector tips which fouls them prematurely. Fuel fitting nuts, compression sleeves, and fuel line connectors made of brass are acceptable because diesel fuel does not flow across their surfaces
- **DO NOT** use PTFE (Polytetrafluoroethylene) thread sealing tape on fuel fittings in a Precedent unit. PTFE tape may allow strands into the fuel system that could plug the tight clearance fuel injectors causing failures.

Note: *Refer to the illustration provided.*

DETAIL I - Fuel lines should be routed in a protective housing with no kinks or sharp bends. Rubber grommets must be used when routing fuel lines through holes in metal.

DETAIL II - Secure all fuel lines with provided clamps.

DETAIL III - Both the fuel supply and the fuel return lines must be 25.4 (1.00 in.) from bottom of tank and the ends cut at 45 degree angle.

Important: *The anchor tie and conduit provided in the installation kit are to be used to secure the fuel lines to the rear of the frame. The fuel lines must also be secured to the front of the frame with the supplied clamp as shown.*

1. Install and route 3/8" fuel line from **regulator / strainer SUPPLY** fitting down to the fuel tank.
   a. Install 3/8" pass through fitting onto the fuel tank **SUPPLY** tube fitting.
   b. Cut end of 3/8" fuel line at 45 degrees and install sleeve and nut.
   c. Insert fuel line into fuel tank **SUPPLY** tube until it bottoms out, then pull line up 25.4 mm (1.00 in.) and tighten nut securely.
2. Install and route 3/8" fuel line from **regulator / strainer RETURN** fitting down to the fuel tank.
   a. Install 3/8" pass through fitting onto the fuel tank **RETURN** tube fitting.
   b. Cut end of fuel line at 45 degrees and install sleeve and nut.
   c. Insert fuel line into fuel tank **RETURN** tube until it bottoms out, then pull line up 25.4 mm (1.00 in.) and tighten nut securely.
3. Remove plastic cap from the fuel tank air vent and point the outlet to the rear of the trailer.

Note: *It is important not to allow the unit to run out of fuel during the engine break-in period. Add a sufficient amount of fuel (approximately 20 gallons) to allow the unit to run for 8 to 12 hours during engine break-in and pre-delivery procedures.*

Figure 3. S-Series Without Optional Fuel Heater Shown

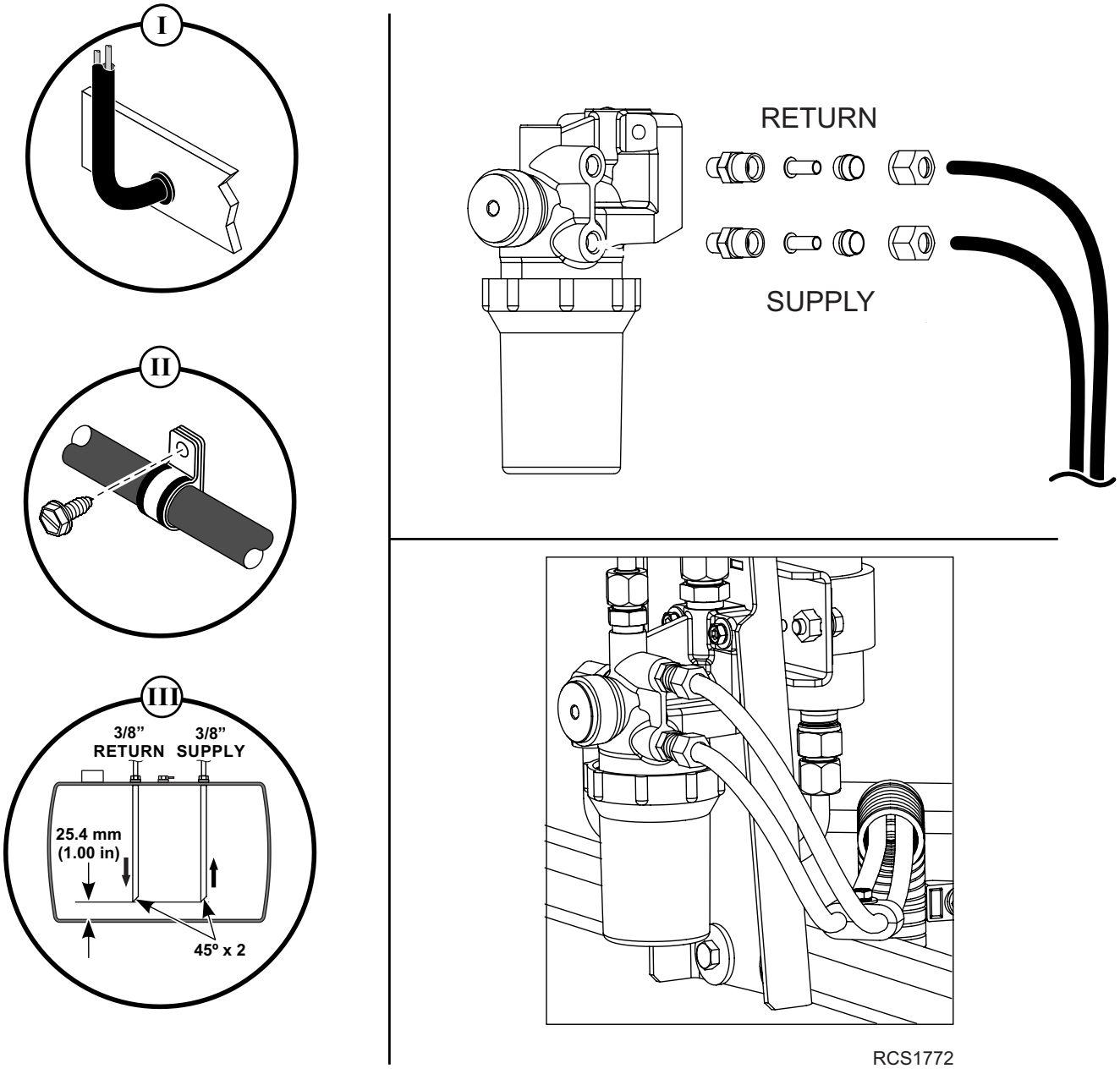

With Optional Fuel Heater

See "Safety Precautions," p. 5

Important: *Using the wrong fuel system fittings may void your engine warranty! All Thermo King supplied fuel line fittings (except fuel line connector) are nickel plated brass for Precedent units.*

- **DO NOT** use fuel fittings (main body) made of brass, copper, zinc, zinc plated or galvanized steel where it would make direct contact with flowing diesel fuel. Diesel fuel flowing through these types of fittings allows those metals to leach into the fuel forming deposits on the injector tips which fouls them prematurely. Fuel fitting nuts, compression sleeves, and fuel line connectors made of brass are acceptable because diesel fuel does not flow across their surfaces
- **DO NOT** use PTFE (Polytetrafluoroethylene) thread sealing tape on fuel fittings in a Precedent unit. PTFE tape may allow strands into the fuel system that could plug the tight clearance fuel injectors causing failures.

Note: *Refer to the illustration provided.*

DETAIL I - Fuel lines should be routed in a protective housing with no kinks or sharp bends. Rubber grommets must be used when routing fuel lines through holes in metal.

DETAIL II - Secure all fuel lines with provided clamps.

DETAIL III - Both the fuel supply and the fuel return lines must be 25.4 (1.00 in.) from bottom of tank and the ends cut at 45 degree angle.

Important: *The anchor tie and conduit provided in the installation kit are to be used to secure the fuel lines to the rear of the frame. The fuel lines must also be secured to the front of the frame with the supplied clamp as shown.*

1. Install and route 3/8" fuel supply line from **fuel heater INLET** fitting down to the fuel tank.
   a. Install 3/8" pass through fitting onto the fuel tank **SUPPLY** tube fitting.
   b. Cut end of 3/8" fuel line at 45 degrees and install sleeve and nut.
   c. Insert fuel line into fuel tank **SUPPLY** tube until it bottoms out, then pull line up 25.4 mm (1.00 in.) and tighten nut securely.
2. Install and route 3/8" fuel line from **regulator / strainer RETURN** fitting down to the fuel tank.
   a. Install 3/8" pass through fitting onto the fuel tank **RETURN** tube fitting.
   b. Cut end of fuel line at 45 degrees and install sleeve and nut.
   c. Insert fuel line into fuel tank **RETURN** tube until it bottoms out, then pull line up 25.4 mm (1.00 in.) and tighten nut securely.
3. Remove plastic cap from the fuel tank air vent and point the outlet to the rear of the trailer.

Note: *It is important not to allow the unit to run out of fuel during the engine break-in period. Add a sufficient amount of fuel (approximately 20 gallons) to allow the unit to run for 8 to 12 hours during engine break-in and pre-delivery procedures.*

Figure 4. S-Series With Optional Fuel Heater Shown

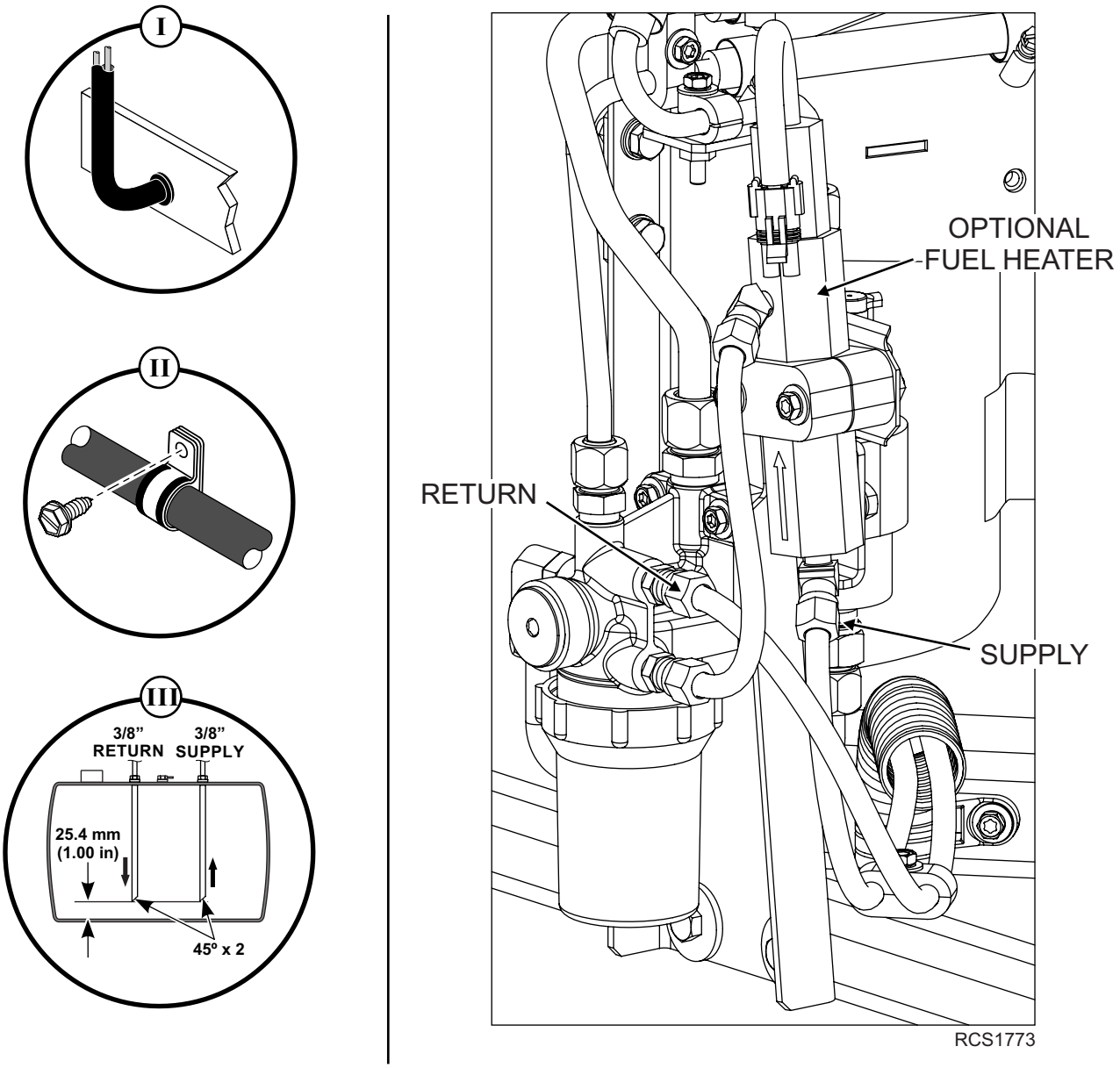

Installing UFLS Harness – Trailer Applications

⚠ Danger

Fire Hazard!

Do not route electrical harness together with fuel lines as this could cause a fire resulting in death or serious injury.

Important: *All electrical connections from UFLS harness to UFLS must be made with supplied crimp and solder style connectors with separate heat shrink tubing. DO NOT burn heat shrink. If heat shrink is burnt, charred, or has bubbles from overheating, the wire connections must be removed and redone correctly.*

Important: *This is a "Solid State" fuel level sensor and the SR-4 Controller must be programmed accordingly to enable the fuel level feature.*

Units Built Before December 16, 2024

Note: *Refer to illustration on the next pages.*

1. Attach the three interconnect harness wires to the three fuel sensor wires located inside control box by following steps a-d below.

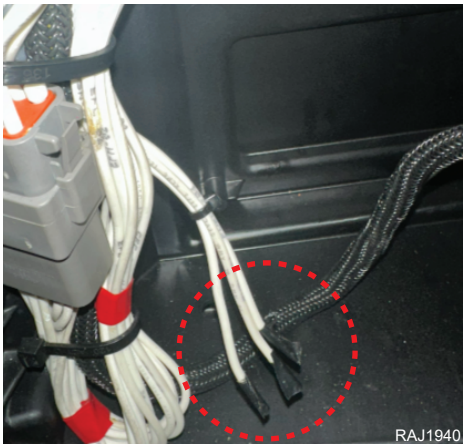

2. Route interconnect harness to fuel tank using trailer's harness conduit or chase to avoid interference with fifth wheel plate area.
3. Splice interconnect harness wires to the UFLS wires by following steps a-d below.
   a. Slide supplied heat shrink tubing onto each wire and position them away from joint.
   b. Connect each wire with wire connector and crimp securely.
   c. Solder wires to wire connectors with a soldering gun.
   d. Slide heat shrink tubing over each wire connector and applying heat with a heat gun.
4. Secure harness with clamps as needed.

Units Built Before December 16, 2024

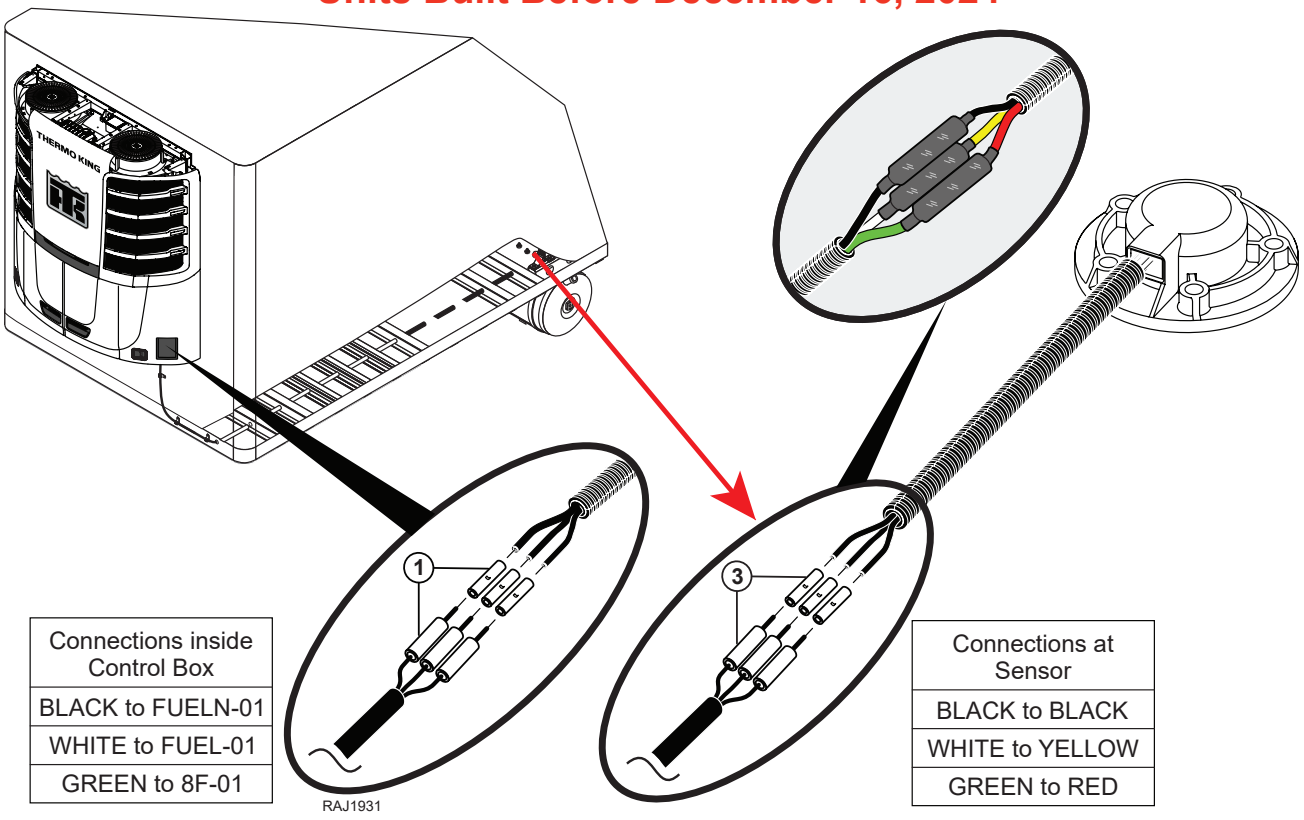

Connections inside Control Box
BLACK to FUELN-01
WHITE to FUEL-01
GREEN to 8F-01

Connections at Sensor
BLACK to BLACK
WHITE to YELLOW
GREEN to RED

Units Built After December 16, 2024

Note: *Refer to illustration on the next page.*

1. Attach the three interconnect harness wires to the three fuel sensor wires located inside control box by following steps a-d below.

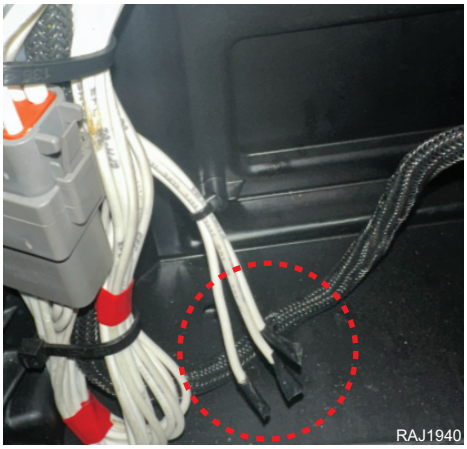

   a. Slide supplied heat shrink tubing onto each wire and position them away from joint.
   b. Connect each wire with wire connector and crimp securely.
   c. Solder wires to wire connectors with a soldering gun.
   d. Slide heat shrink tubing over each wire connector and applying heat with a heat gun.

2. Route interconnect harness to fuel tank using trailer's harness conduit or chase to avoid interference with fifth wheel plate area.
3. Connect the interconnect harness 3–wire connector to the UFLS 3–wire connector near the fuel tank.
   - Attach the edge clip part number **513995** to the fuel tank mounting bracket as shown below.
   - Secure the UFLS connection to the edge clip with a tie strap as shown below.

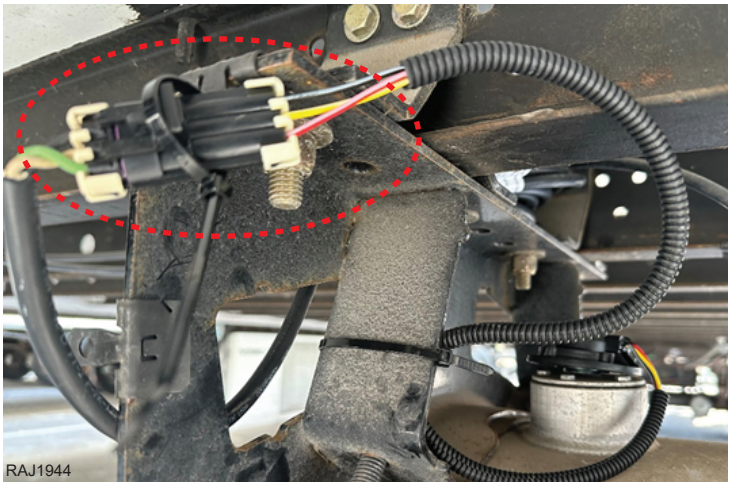

4. Secure the UFLS harness with clamps and cable ties as needed along the entire path of the harness.

Units Built After December 16, 2024

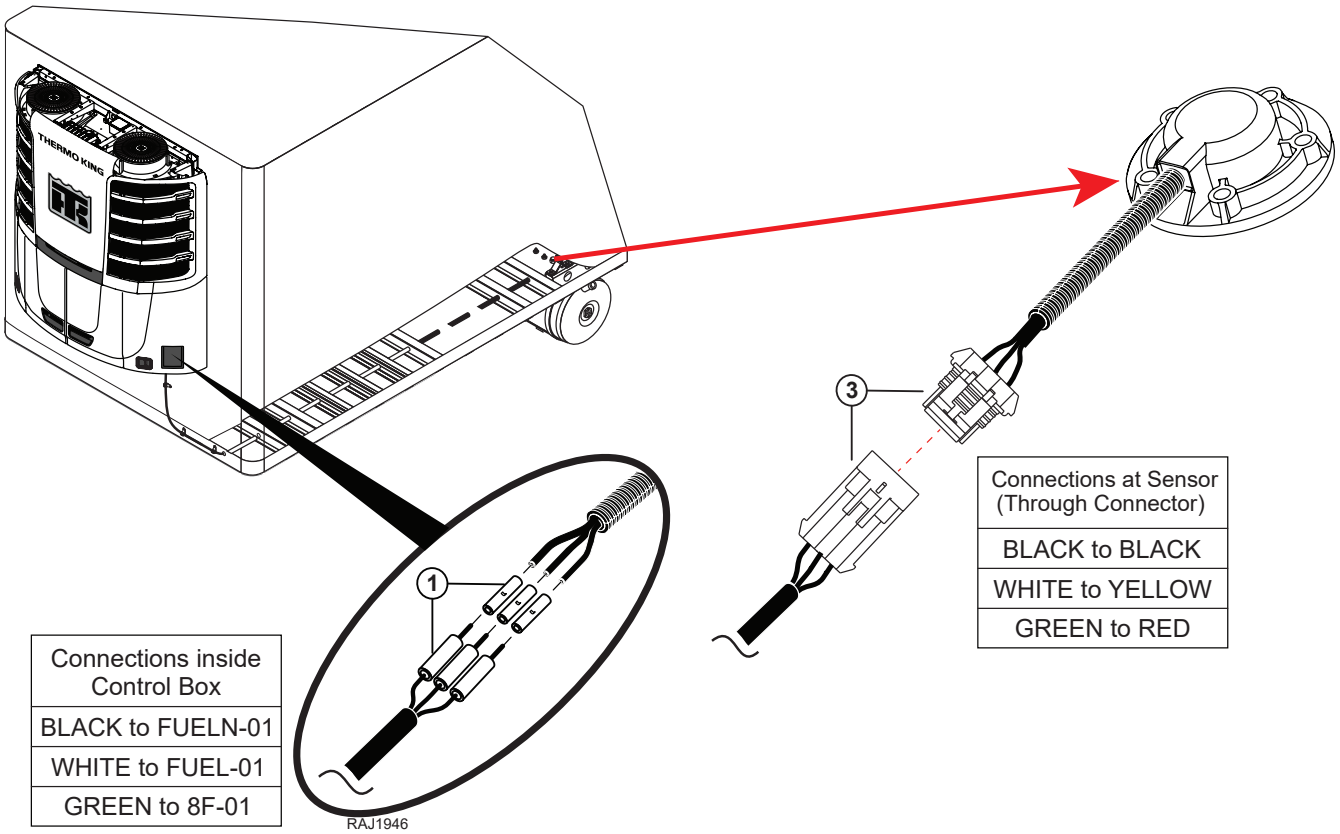

Connections inside Control Box
BLACK to FUELN-01
WHITE to FUEL-01
GREEN to 8F-01

Connections at Sensor (Through Connector)
BLACK to BLACK
WHITE to YELLOW
GREEN to RED

Installing Float Style Fuel Level Sensor Harness – DRC and RBC Applications

Note: *For fuel tanks without Ultrasonic Fuel Level Sensor (UFLS).*

Wire Routing and Connections

⚠ Danger

Fire Hazard!

Do not route electrical harness together with fuel lines as this could cause a fire resulting in death or serious injury.

Note: *Fuel level sensor harness 3-pin connector is located outside the control box. It can be found secured to other harnesses at rear of unit near frame mounted ground plate and behind the battery tray. Refer to the illustration provided.*

Important: *The use of the supplied crimp and solder style connectors with separate heat shrink tubing is required when connecting the fuel level sensor wires.*

1. Locate the factory installed fuel level sensor harness with 3–pin connector.
   a. Apply a light coating of Superlube (or equivalent) to the connector.
   b. Connect the factory installed harness to the 6 ft. (1.8 m) fuel level sensor harness and route to fuel tank.
2. At the tank, cut the harness to length and connect the wires to the fuel level sensor wires (wires are not polarity sensitive) by:
   a. Sliding supplied heat shrink tubing onto each wire and positioning them away from the joint.
   b. Stripping the wire ends, inserting them into the wire connectors and crimping securely.
   c. Soldering the wires to the connectors with a soldering gun.
   d. Sliding the heat shrink tubing over the wire connectors and applying heat with a heat gun.
3. Use supplied bandwraps, clamps, and screws to secure the harness.

Important: *This is a "Float Style" fuel level sensor and the SR-4 Controller must be programmed accordingly to enable the fuel level feature.*

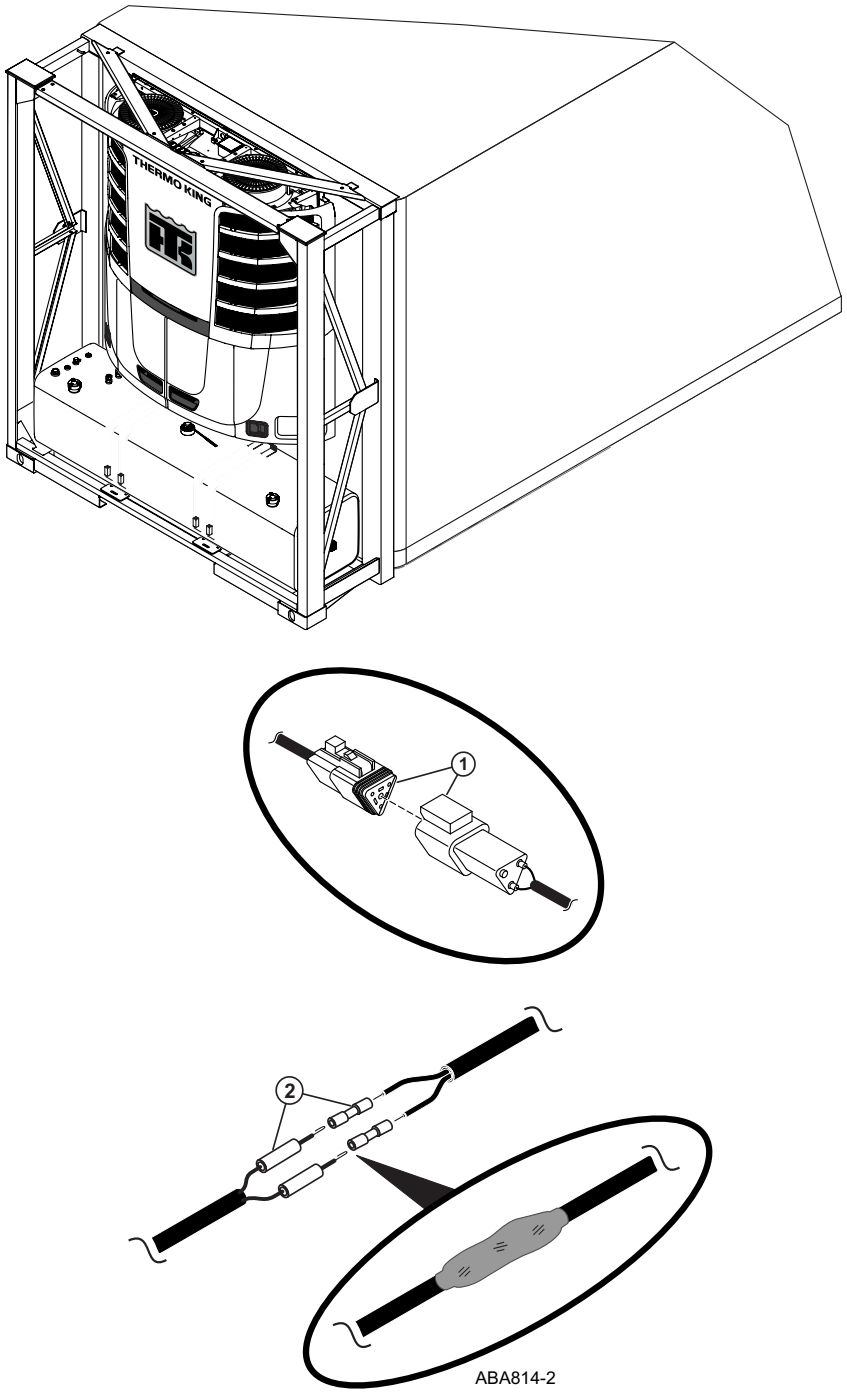
THERMO KING
1
2
ABA814-2

Installing SmartPower Receptacle — Trailer Applications

Power Receptacle Installation

⚠ Danger

Hazardous Voltage!

Risk of fatal injury from electric shocks! Precedent SmartPower units with the remote power receptacle option require the electrical wiring (installer supplied) to be correctly sized and properly installed to prevent serious injury or death! The unit ground wire (supplied) must also be properly attached to the trailer chassis. Refer to TK 55597 for installation guidelines. These guidelines must be followed.

Note: *SmartPower receptacle is factory wired and secured inside the unit with tie bands for shipment. Install receptacle as follows:*

1. Remove tie bands securing receptacle to unit.
   a. Attach receptacle bracket under roadside of unit with two supplied screws.
   b. Securely tighten hardware.
2. Secure cable to trailer wall with supplied cable clamps and screws.

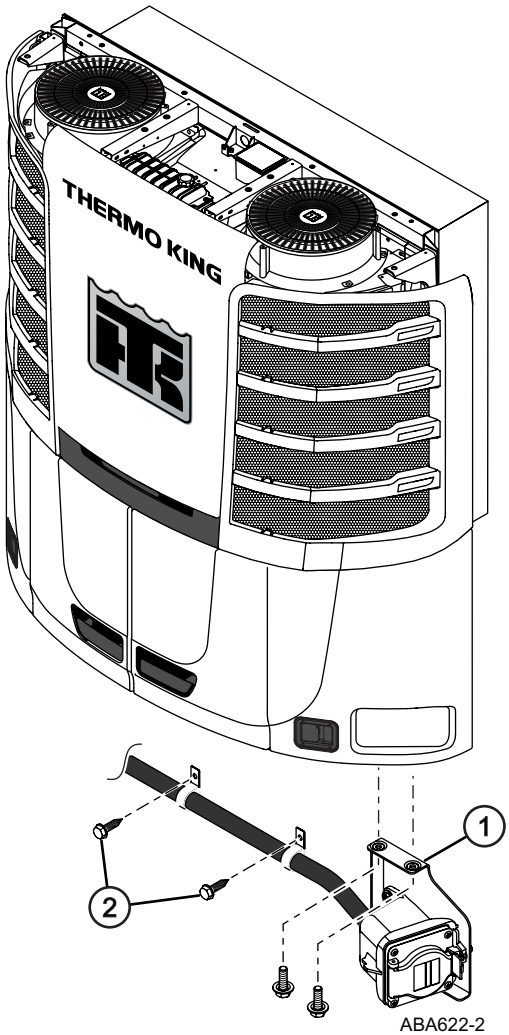

ABA622-2

Installing LED Clearance Lighting (Option) – Trailer Applications

Installation

Note: *Refer to the illustration provided.*

1. Locate the following:
   - LED extension harness bundled and secured under the unit.
   - Fuse holder and butt splice connector shipped with the unit.
2. Route the LED extension harness to the trailer's OEM lighting connector.
3. Allow enough wire to provide a drip loop and cut LED extension harness to proper length.
4. **POWER WIRE** - Install the fuse holder to the power wire **(LEDP-07)** with the butt splice connector.
   - Connect the power wire with the fuse holder to the **BROWN** wire on the trailer's OEM lighting connector.
5. **GROUND WIRE** - Connect the ground wire **(LEDN-07)** to the **WHITE** wire on the trailer's OEM lighting connector.
6. Provide a drip loop and secure wires with a clamp.

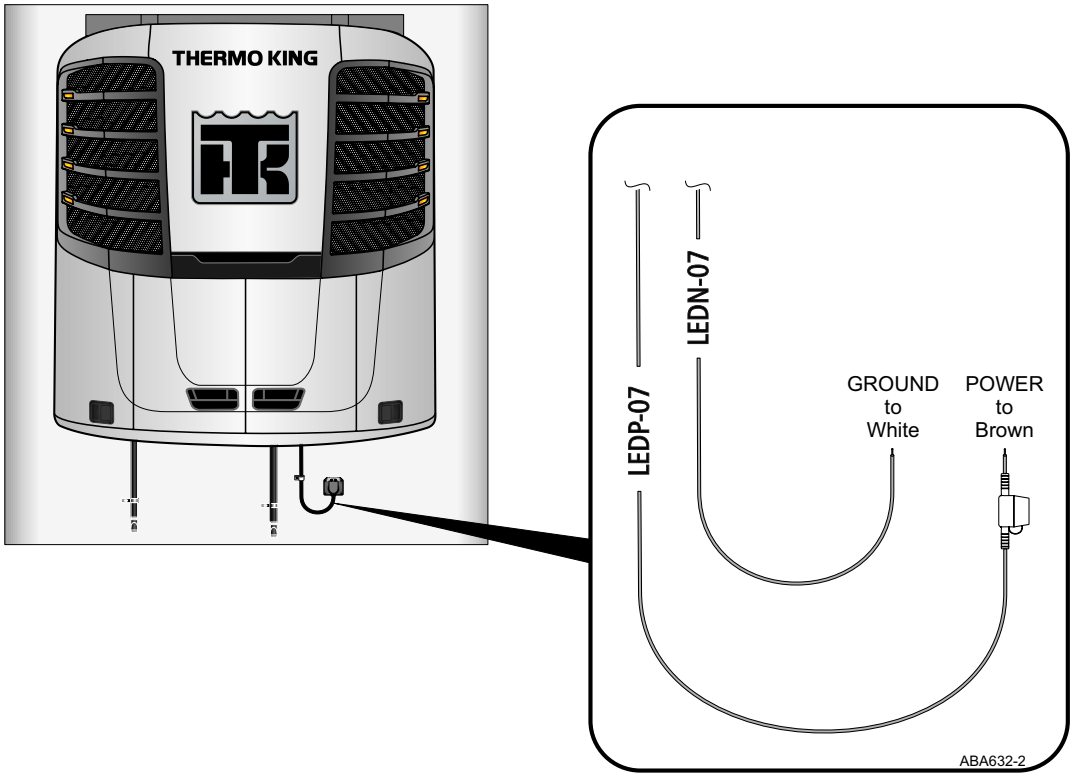

Installing Battery

Important Battery Information

Important: *See "Battery Installation and Cable Routing" ("Safety Precautions," p. 5) for additional information.*

⚠ Warning

Hazard of Explosion!

An improperly installed battery could result in a fire, explosion, or injury. A Thermo King approved battery must be installed and properly secured to the battery tray.

⚠ Warning

Hazard of Explosion!

Improperly installed battery cables could result in a fire, explosion, or injury. Battery cables must be installed, routed, and secured properly to prevent them from rubbing, chaffing, or making contact with hot, sharp, or rotating components.

Note: *Thermo King units are designed for one 12 volt, group 31 battery. The battery must be suitable for deep cycling, heavy duty, and rated with a minimum of 95 amp/hr.*

Battery Installation

Important: *Care should be taken to prevent direct metal contact to the battery's positive post when installing the battery.*

Note: *Refer to the illustration provided.*

1. Open the roadside panel to access the control box.
   a. Loosen the two bolts securing the control box in place.
   b. Swing the control box away to gain access to the battery tray area.
2. Open the roadside door.
   a. Pull the hinge pins and remove the door assembly from unit.
3. Locate the lower bracket directly in front of the battery tray.
   a. Remove the two bolts and bracket from the frame.
4. Install the battery into the plastic liner.
5. Attach the **positive (+)** battery cable on the positive battery post and securely tighten.
6. Install the battery hold down rods and bracket.
   a. Tighten the two battery hold down rods to 2.25 N•m (20 in -lbs.). **DO NOT over tighten as this may crack or distort the battery**.
7. Attach the **negative (-)** battery cable on the negative battery post and securely tighten.
8. Reinstall the bracket removed in Step 3 and securely tighten hardware.
9. Swing the control box assembly back into place and securely tighten the two screws.
10. Reinstall the roadside door back onto the hinges and securely close.

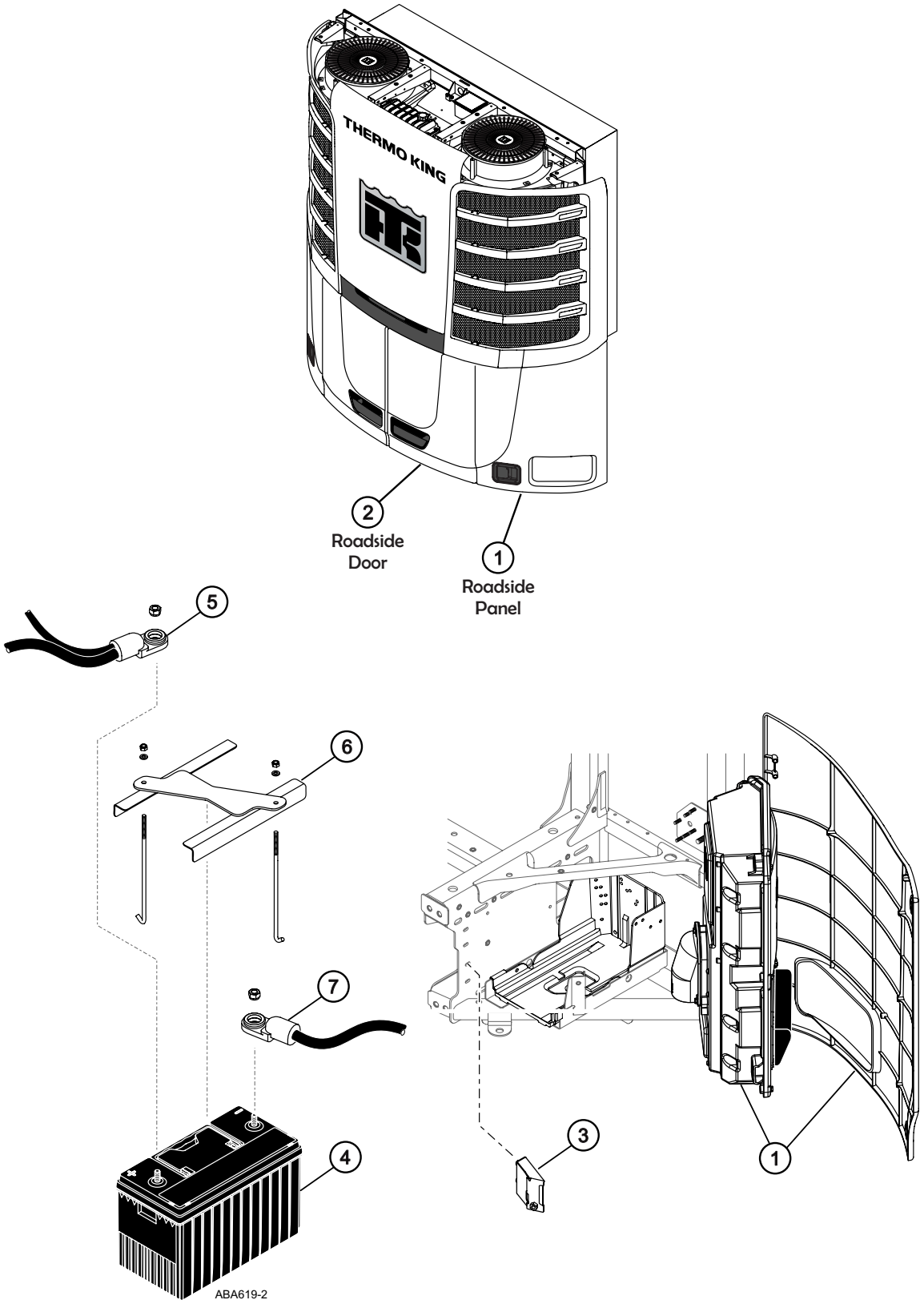
THERMO KING
2
Roadside
Door
1
Roadside
Panel
5
6
7
4
3
1
ABA619-2

Installing Top Covers and Bottom Pan – Trailer Applications

Important Fairing Information

Note: *The top fairing increase the height of the unit by approximately 76 mm (3.00 in.). Tractor trailer height restrictions differ from state to state. The total height of the unit installed onto your particular trailer should not exceed these height restrictions. Remove the top fairing if it causes the unit to exceed these height restrictions.*

Top Covers

Important: *Top covers must be positioned between condenser fan grille and fairing as shown in Detail A. Refer to the illustration provided.*

1. Open the top door along with the curbside and roadside grilles.
2. Remove the two M6 screws that secure the fairing to each condenser fan grille as shown in Detail A.
3. Place top covers onto unit.
   a. Lift fairing up just enough so the top cover mounting holes are positioned under the fairing mounting tab,
   b. Loosely reinstall the M6 screws back down through fairing, top cover and into condenser fan grille.
   c. Install remaining M6 scews supplied in kit to secure top covers to threaded inserts on frame.
   d. Use a T-30 Torx drive and tighten screws to 69 kg-cm (60 –in.lbs).

Bottom Pan

4. Open the roadside and curbside panels and doors.
5. Install five (5) nut clips onto frame: three (3) in frame mounting tabs, and one (1) in the end of the frame channels as shown in Detail B.
   a. Position bottom pan under unit, align the five (5) mounting holes with the frame mounting tabs with nut clips and loosely install the M6 screws and washers.
   b. Loosely install one (1) M6 screw and washer through the front center pan lip and into the front frame tab insert.
   c. Loosely install the remaining eight (8) M6 screws and washers.
   d. Use a T-30 Torx drive and tighten screws to 69 kg-cm, (60 in-lbs).
6. Close and secure all doors, panels and grilles.

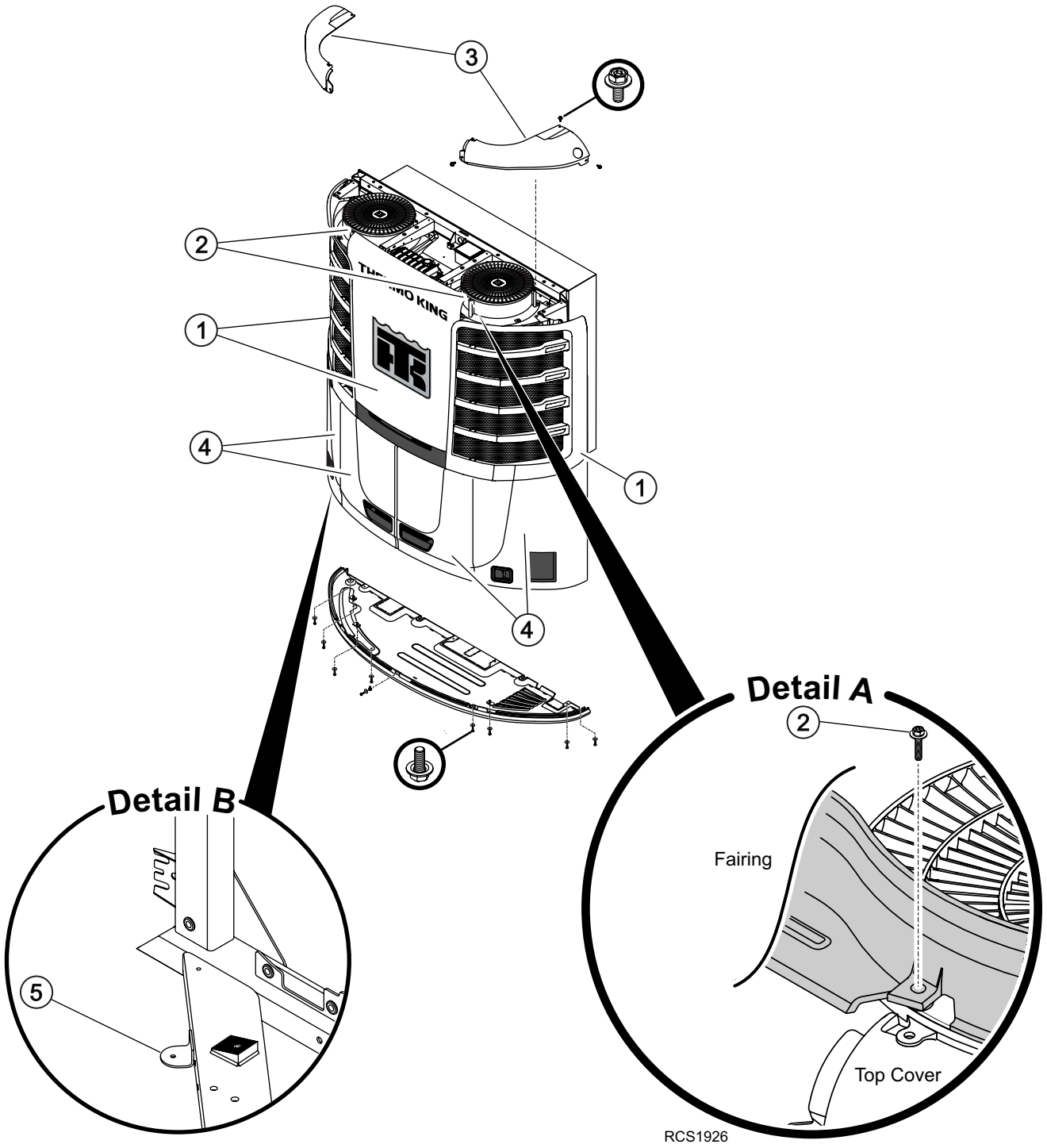
3
2
1
4
1
4
Detail A
2
Fairing
Top Cover
Detail B
5
RCS1926

Installing Top Covers and Bottom Pan – DRC and RBC Applications

Top Covers

Note: *Refer to the illustration provided.*

1. Open the top door along with the curbside and roadside grilles.
2. Remove the two M6 screws from each condenser fan grille as shown in Detail A.
3. Place top covers onto the unit with the upper mounting tabs positioned over the condenser grille mounting holes.
   a. Loosely reinstall the M6 screws back down through the top cover mounting tabs and into the condenser fan grilles **(Detail A)**.
   b. Install remaining M6 screws supplied in kit to secure top covers to threaded inserts on the frame.
   c. Use a T-30 Torx drive and tighten screws to 69 kg-cm (60 in-lbs.).

Bottom Pan

Note: *Refer to the illustration provided.*

4. Open the roadside and curbside panels and doors.
5. Before installing the bottom pan, two (2) 25.4 mm (1.00 in.) diameter holes will need to be drilled and grommets installed for the fuel lines. The hole location varies depending on your fuel tank. See "Installing Bottom Pan Gromments – DRC and RBC Applications Only," p. 57.
6. Install five (5) nut clips onto frame: three (3) in frame mounting tabs, and one (1) in the end of the frame channels as shown in Detail B.
   a. Position bottom pan under unit, align the five (5) mounting holes with the frame mounting tabs with nut clips and loosely install the M6 screws and washers.
   b. Loosely install one (1) M6 screw and washer through the front center pan lip and into the front frame tab insert. **(Detail B)**
   c. Loosely install the remaining eight (8) M6 screws and washers.
   d. Use a T-30 Torx drive and tighten screws to 69 kg-cm, (60 in-lbs).
7. Close and secure all doors, panels and grilles.

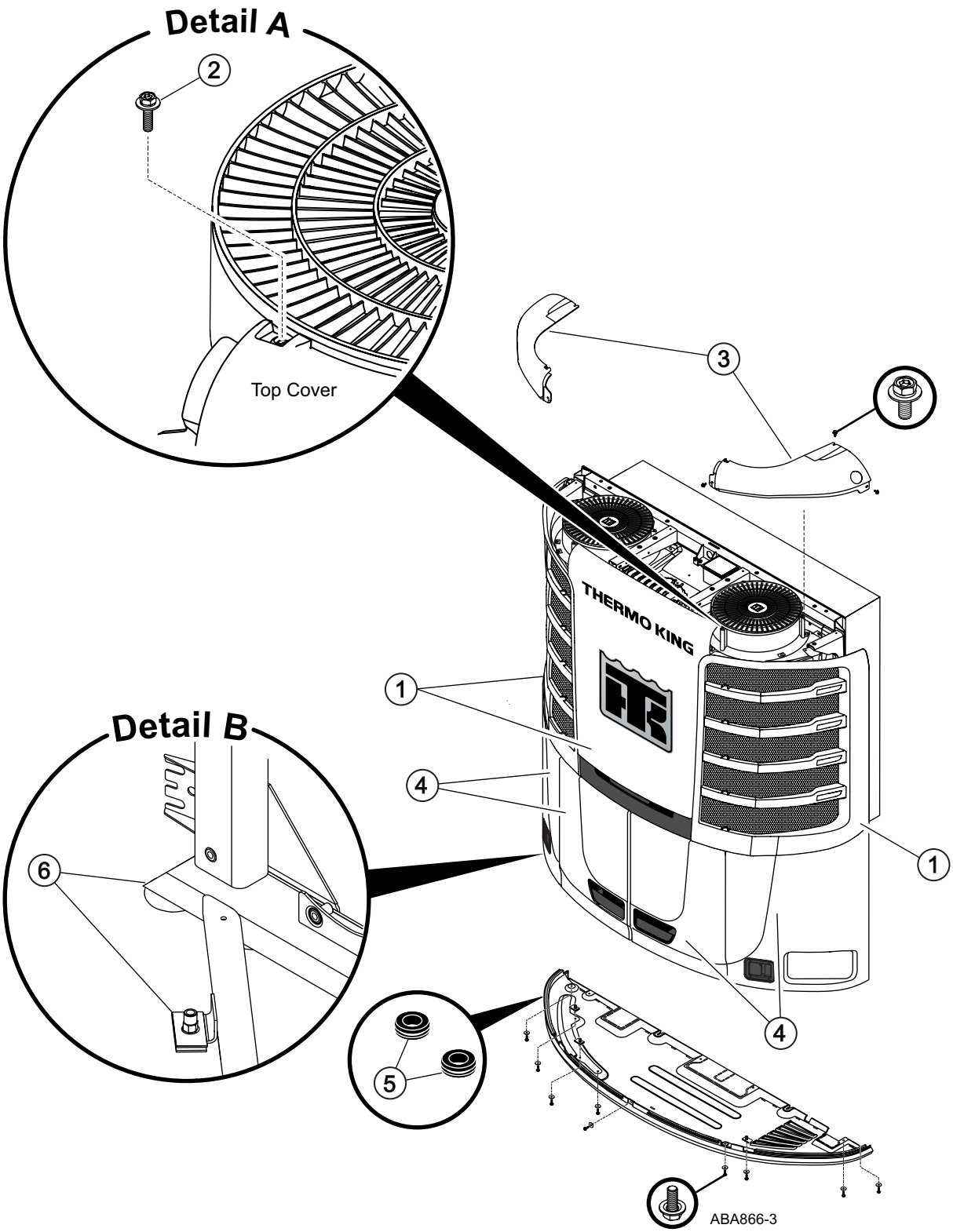
Detail A
2
Top Cover
3
THERMO KING
1
4
1
Detail B
6
4
5
ABA866-3

Installing Bottom Pan Gromments – DRC and RBC Applications Only

Note: *Before installing the bottom pan, two fuel line holes will need to be located, drilled and the supplied grommets installed. Refer to the illustration provided.*

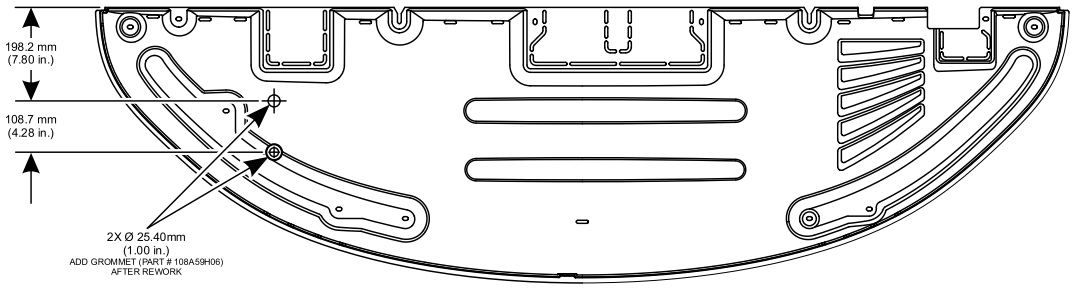

BOTTOM PAN REWORK FOR 120 & 156 GALLON TANK
S600RR DRC AND S700RR DRC

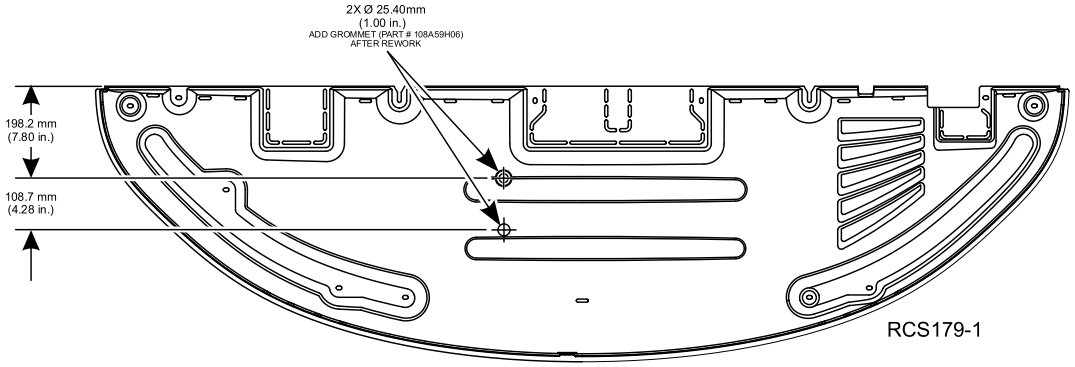

BOTTOM PAN REWORK FOR 85 GALLON TANK
S600RR DRC AND S700RR DRC

Installing Exhaust Pipe Extension – DRC Applications Only

Installation (containers <u>with</u> hanger support)

Note: *Refer to the illustration provided.*

1. Install the exhaust hanger onto the hanger support located on the container.
2. Install the extension pipe onto the end of the exhaust pipe on the unit.
3. Install exhaust clamps and tighten securely.

Installation (containers <u>without</u> hanger support)

Note: *If your container does not have an exhaust hanger support, one will need to be fabricated and installed.*

How to fabricate an exhaust hanger support:

1. Loosely install the exhaust pipe extension onto the end of the exhaust pipe on the unit.
2. Position the exhaust hanger and exhaust clamps as shown in the illustration.
3. Tighten the clamp to secure the extension pipe onto the unit.
4. Mark location of the exhaust hanger support on the container.
5. Weld the hanger support securely to the container.
6. Install the exhaust hanger onto the exhaust hanger support and tighten exhaust clamps securely.

Nameplate Installation

Clean the surface of the container where the exhaust pipe outlet is located and attach the nameplate.

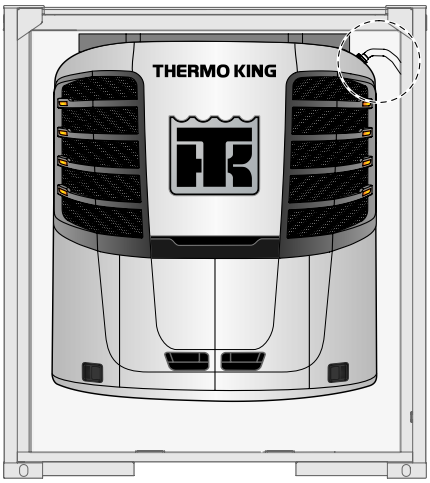

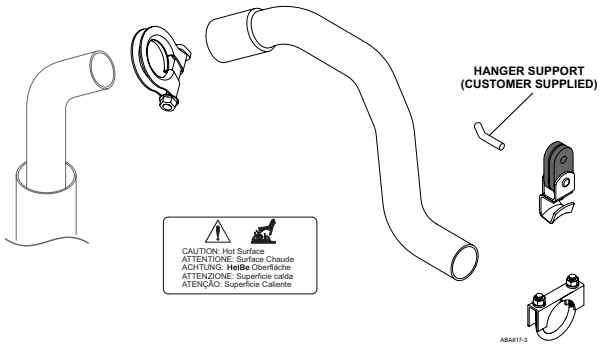

Operating the Unit

STOP - ONLY TRAINED AND QUALIFIED INDIVIDUALS SHOULD OPERATE THE UNIT. REFER TO YOUR UNIT OPERATORS MANUAL FOR SPECIFIC DETAILS.

High Voltage Safety Precautions

⚠ Danger

Hazardous Voltage!

Dangerous three phase AC electric power is present whenever the unit is operating in either Diesel Mode or Electric Mode and whenever the unit is connected to a source of external standby power. Voltages of this magnitude can be lethal. Exercise extreme caution when working on the unit. If there is a risk of energized electrical contact, arc, or flash, technicians MUST put on all PPE in accordance with OSHA, NFPA 70E, or other local, state, or country-specific requirements for arc flash protection PRIOR to servicing the unit. NEVER PERFORM ANY SWITCHING, DISCONNECTING, OR VOLTAGE TESTING WITHOUT PROPER ELECTRICAL PPE AND ARC FLASHING CLOTHING. ELECTRICAL METERS AND EQUIPMENT MUST BE PROPERLY RATED FOR INTENDED VOLTAGE.

High Voltage Components

Various components on the Precedent unit operate using 460/3/60 high voltage and are identified by warning nameplates.



ABA624

All high voltage wiring is identified by ORANGE conduit. Be aware of the locations of these components. Only certified, trained technicians can service them. Refer to the following page for locations of high voltage components.

Unit Fan Operation Safety Precautions

⚠ Danger

Risk of Injury!

The unit's Condenser fans and Evaporator fans may start automatically anytime the unit switch is ON and can cause serious injury. Switch unit to OFF before servicing.

Condenser and Evaporator Fans

Be aware of the warning nameplates near the condenser fans and evaporator fans.

High Voltage Warning Nameplates

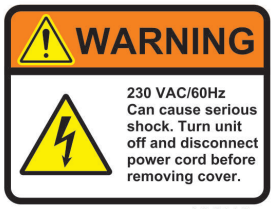

ABA623



ABA624

Fan Warning Nameplate



ABA625

Figure 5. High Voltage Components Locations Shown

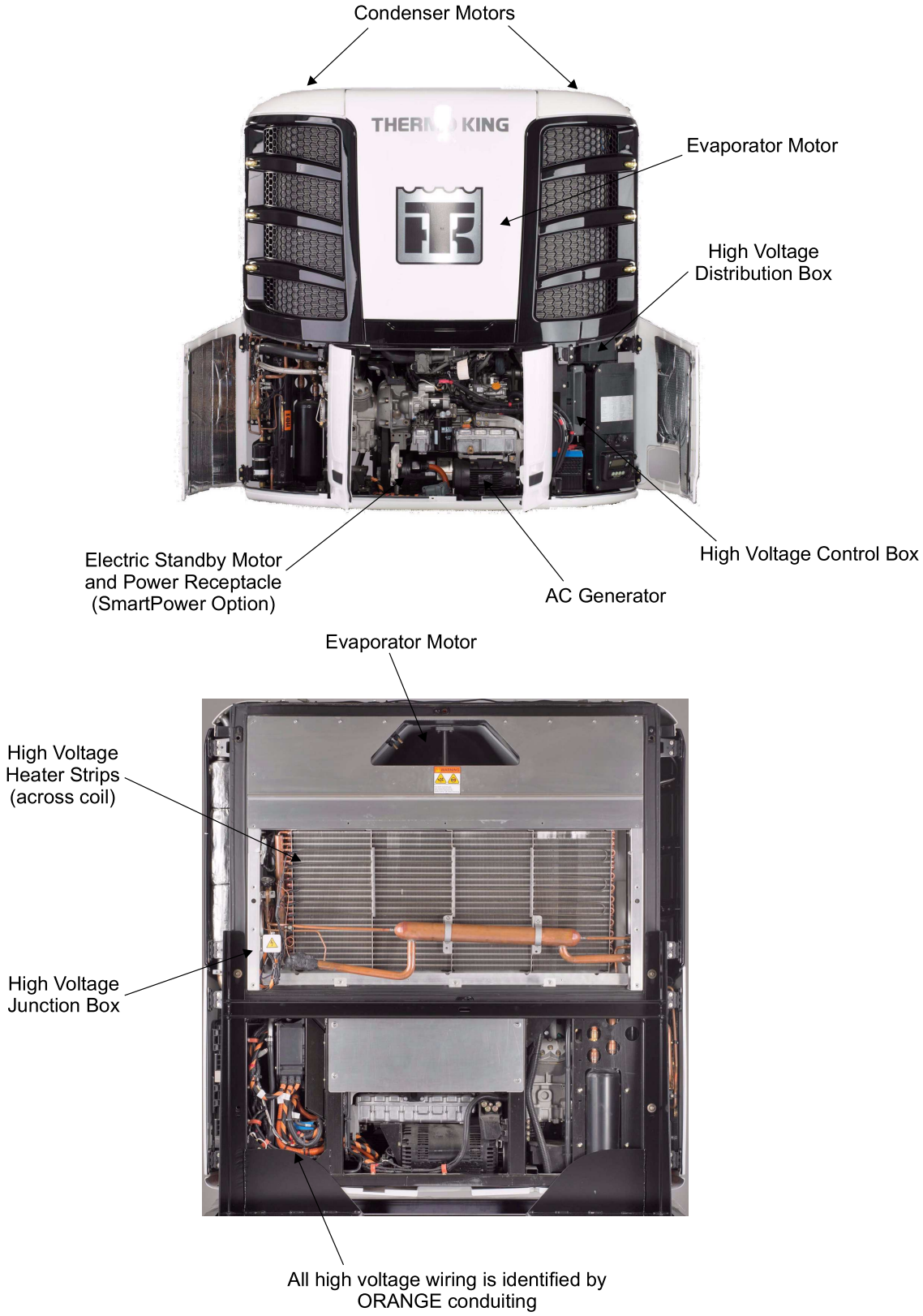

Figure 6. S-750i High Voltage Component Locations (Front)

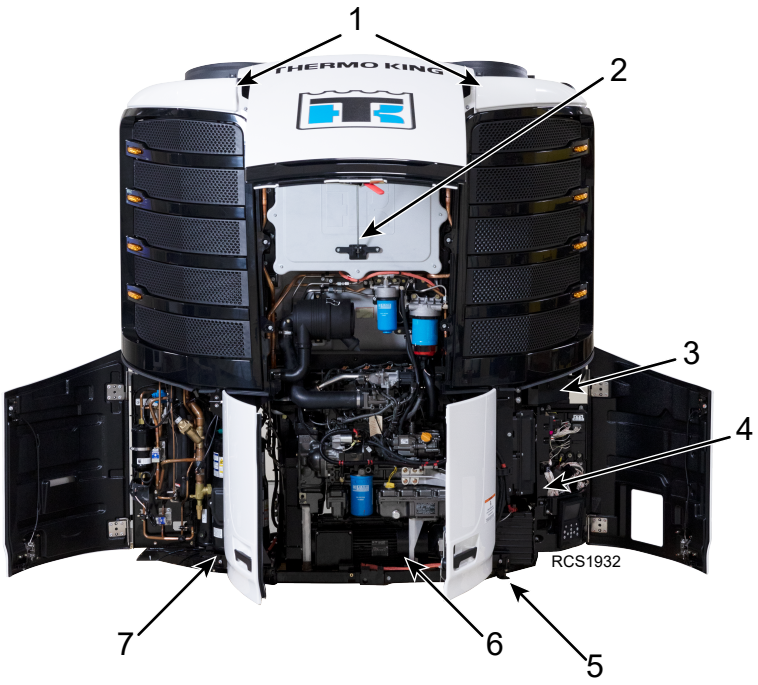

1.	Condenser Motors	5.	StandBy Power Receptacle (under unit)
2.	Evaporator Motor	6.	Electric Generator
3.	High Voltage Box	7.	Scroll Compressor
4.	High Voltage Contactor Box		

Priming the Fuel Pump

The fuel pump needs to be primed and the fuel system bled of air before the diesel engine can be started for the first time.

There are two ways this can be done:

Recommended Procedure

Note: *The fuel pump can be primed and fuel system bled of air (without starting the engine) by using the SR-4 Controller to operate only the fuel pump relay.*

1. Access **Maintenance Menu**
2. Access **Output Test**
3. Access **Run Relay** and PRESS Lock Key.
4. The fuel pump will begin to operate. Allow the pump to run for 5 minutes.
   - The diesel engine can now be started using the normal SR-4 Controller functions.

Alternative Procedure

Note: *The fuel pump can be primed and fuel system bled of air by using the normal SR-4 Controller functions to start and run the unit.*

1. Use the SR-4 Controller to start the unit.
   - It may take a few attempts to start the diesel engine as the fuel pump primes itself, fills the fuel lines and filter, and automatically bleeds air from the system.
   - Once the unit starts, Alarm Code 20 (Engine Failed to Start) may be present and should be cleared.

Programming the Controller

Fuel Level (Guarded Access)

Note: *These procedures can also be done through OptiSet™.*

Programming Procedures

Note: *The Guarded Access Menu is not available if the engine is running.*

1. Turn off the engine.
2. Go to the Guarded Access Menu.
3. Scroll down and select the Unit Configuration.
4. Scroll down and select Fuel Level Sensor.

   The choices are: NONE, SOLID STATE, or FLOAT.
   - **USFLS STYLE** - scroll to SOLID STATE by pressing + key then YES key.
   - **FLOAT STYLE** - scroll to FLOAT by pressing + key then YES key.
   - Fuel Level Percent will now be in the gauge menu.
5. The unit is now programed, press the exit key.

THERMO KING

Unit Check List

UNIT CHECK LIST

- ☐ BEFORE installing the unit, visually inspect it for any damage. If any damage appears, file claim with delivery carrier.
- ☐ Install the fuel tank, fuel lines and unit as outlined in the Thermo King Installation Manual.
- ☐ Add 20 gallons (minimum) of ultra-low sulfur diesel fuel to the tank.

BEFORE STARTING THE UNIT

- ☐ Check battery and battery cable installation.
- ☐ Inspect fuel line routing checking for rubbing, chaffing or laying on hot surfaces.
- ☐ Visually inspect the unit for the following: Loose or improperly fitting bolts, brackets, hardware, hose connections, and hose routing.
- ☐ Inspect all wiring connections and routing.
- ☐ Check defrost drain hoses and kazoos.
- ☐ Check unit mounting hardware for tightness.
- ☐ Check compressor and engine mounts.
- ☐ Install refrigeration gauge manifold. (Multi-Temp units only)
- ☐ Check engine oil level.
- ☐ Check condenser and evaporator section for cleanliness and signs of refrigerant leaks.
- ☐ Check front bulkhead and air chute if equipped.

MULTI-TEMP UNITS (REMOTE EVAPORATORS)

- ☐ Check evaporator(s) sections for cleanliness.
- ☐ Leak test interconnecting tubing.
- ☐ Check for damage, loose or missing bolts, and hardware on remote evaporator(s).
- ☐ Check for proper installation of drain tubes, drain kazoos and drain tube heater wires.
- ☐ Check for properly routed refrigerant lines wiring harnesses for remote evaporator(s). Check for properly routed harnesses for remote controller.
- ☐ Check for proper installation of remote evaporator guards if equipped.
- ☐ Check remote harness wiring plugs in the host evaporator.
- ☐ Check wiring, connections, and terminals in the remote evaporator(s).
- ☐ Check compartment bulk head(s) for proper fit if equipped.

START AND RUN UNIT (On Multi-Temp units, start only the host unit)

- ☐ Check for proper oil pressure, coolant temperature, oil, fuel, or coolant leaks.
- ☐ Check alternator or battery charger for proper output.
- ☐ Cycle the unit and ensure the unit functions in the correct modes and the mode indicators are working.
- ☐ Confirm engine speeds at normal engine running temperature. High Speed and Low Speed per maintenance manual. Check @70° F (21 C) box temperature and 70° F (21 C) ambient.
- ☐ Set for continuous run with thermostat set point at 32 F (0 C) and run the unit to 32 F (0 C).
- ☐ Observe and record refrigerant operating pressures in relation to ambient and box temperatures.
- ☐ Verify the readings above are correct for the conditions.
- ☐ When box reaches 32 F (0 C) check calibration of thermostat, thermometer and data logger.
- ☐ Run unit for 30 minutes at 32 F (0 C). During this period check for correct cycling.
- ☐ Reset thermostat to 50 F (10 C).
- ☐ Check throttling valve while in the heat cycle.
- ☐ Check operation of Modulation system if equipped.

☐ For Single Temp units perform a controlled check of the refrigerant level. For Multi-temps check the charge per multi-temp unit procedures.

MULTI-TEMP UNITS

☐ Install the compartment bulk head(s) if equipped.

☐ Check for correct rotation of remote evaporator fans.

☐ Check for correct cycling and operation of remote evaporator fans.

ALL UNITS

☐ Initiate and check defrost operation and termination. Check operation and adjustment of damper door and remote fans. Each zone on multi-temp units must be checked for proper operation.

☐ Check for proper operation of all door switches.

☐ Remove the compartment bulk head(s) if equipped.

☐ Verify fuel level is sufficient to run unit for 6 hours, close trailer doors and initiate engine break-in mode. (more engine break-in mode information can be found in the Diagnostic Manual).
To enter engine break-in mode: Menu>Maintenance Menu>Engine Break-in Mode>Select>Start. Engine will run for 6 hours to complete engine break-in.

☐ Run Pre-trip.

ELECTRIC STANDBY OPERATIONAL CHECKS

☐ Test AC electrical contacts and connections by connecting to AC power and running.

☐ Check for correct electric motor rotation.

☐ Check compressor clutch operation.

☐ Cycle thermostat and check for correct modes of operation.

☐ Power source not available to test AC.

STOP UNIT

☐ On multi-temp units, leak test interconnecting tubing.

☐ Check and readjust all belt tensions using TK belt gauge 204-1903 or equivalent frequency tool.

☐ Check for oil, fuel, coolant, refrigerant, and exhaust leaks.

☐ Check engine oil and coolant level.

☐ Check entire unit for loosened hardware and fittings.

☐ Check and adjust all skin, door and panels for correct alignment and operation.

☐ Complete the commissioning registration process.

☐ Release unit.

Thermo King – by Trane Technologies (NYSE: TT), a global climate innovator – is a worldwide leader in sustainable transport temperature control solutions. Thermo King has been providing transport temperature control solutions for a variety of applications, including trailers, truck bodies, buses, air, shipboard containers and railway cars since 1938. For more information, visit www.thermoking.com or www.tranetechnologies.com.

Thermo King has a policy of continuous product and product data improvements and reserves the right to change design and specifications without notice. We are committed to using environmentally conscious print practices.

TK 55496-2-IM-EN 12 Dec 2024
Supersedes (New)

©2015 Trane Technologies